FUTURING SMART ENERGY

www.lsis.com

Susol
Super Solution

Low voltage circuit breakers

LS IS

LSIS continues
the value and the prominence of LG

New Name for LG Industrial Systems,
New Take-off for LSIS

To advance to the next level,
LG Industrial Systems is reborn as LS Industrial Systems.
LSIS will continue to lead the future
of industrial electrics and automation by providing
Total Solution, a core essential
for competition in the 21st century industrial era.

Research & Development

We provide differentiated values.

The world-class Power Testing & Technology Institute guarantees certified products and global brands.

The PT&TI is an accredited testing laboratory that provides a worldwide testing service with a 1500MVA-capacity High Power Laboratory, a High Voltage Laboratory, and a Reliability Testing Laboratory. Its testing has been fully acknowledged and recognized by overseas testing certification bodies, such as KEMA of Netherlands, UL of America, and CE of the EU for its low voltage testing.

Global technology and R&D are behind the best industrial Electric power and automation products from LSIS

Quality Test at PT&T

High Voltage Test / Impulse Test

Characteristics Test / VCB Characteristics Test

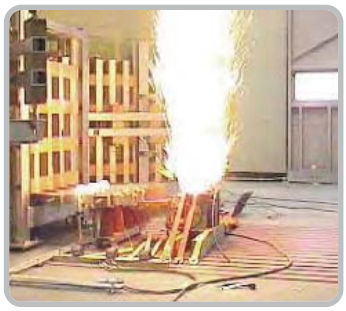

Short-Circuit Test / ACB Breaker Test

Environmental Test /
Non-stop High Temperature Test

Electro Technology R&D Center

The Electro Technology R&D Center focuses on overall research and development activities related to power supply systems such as low and high voltage equipment as well as integrated digital networks, automatic switchboards and integrated power protection.
The R&D Center maximizes energy efficiencies by integrating rapidly developing information & technology, communication, electronics and mechanical engineering, while concentrating its efforts in creating a safe and pleasant industrial environment.

- **Power Equipments**
  The R&D Center researches products and technologies related to low and high voltage circuit breakers and contactors as well as power transmission & distribution.
- **Electric Technology**
  The R&D Center analyzes and researches core technologies related to power equipment.
- **SCADA**
  The R&D Center carries out projects and technology research in the fields of SCADA and DAS.
- **Simulator**
  The R&D Center predicts probable electrocution hazards by conducting simulated analyses of power generation phenomena, and develops simulation technologies and products that can optimize the constituent facilities.

Power Testing & Technology Institute

PT&T is a KOLAS-qualified (Korea Laboratory Accreditation Scheme) accredited testing laboratory and provides worldwide testing service with its 1500MVA-capacity High Power Laboratory, High Voltage Laboratory and Reliability Testing Laboratory.
PT&T is also fully recognized by foreign testing and certification bodies of high reputation as CESI of Italy, KEMA of Netherlands, UL of America, etc. for its low voltage testings.

- **Available Tests**
  - Electro-Mechanical Tests
  - Insulation Performance Tests
  - Short-Circuit Tests
  - Reliability Evaluation Tests
  - Arc Tests
  - Environmental Tests
- **Research & Development**
  Testing Technology, Measuring & Analyzing Technology, Power Equipment Monitoring & Diagnostic Techniques, Reliability Testing & Evaluation Technology.

Solution provider

You can count on us.

New Face & New Resolution To become a global leader that gives top priority to customer values

We promise you that LSIS will be reborn as a corporation that returns the best values to its customers.

We are committed to global product development, driving future growth, and expanding the overseas market share, as well as consolidating existing business.

Join us in a future where LSIS will become a genuine global leader.

Customer satisfaction with world-class products and services:
LSIS is committed to excellence!

Cheongju Plant (Korea)

Busan Plant (Korea)

Dalian Plant (China)

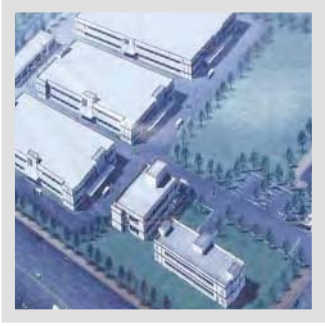

Wuxi Plant (China)

Hanoi Plant (Vietnam)

Electric Power Industry |
Electric Equipment & Systems

The electric equipment and systems of LSIS, ranging from low to high voltage products, have not only acquired ISO 9001 and 14001 certification for their efficient design and excellent quality, but many other certificates, including KEMA, TÜV, CESI, ASTA, and KERI. The outstanding quality of the products that we are manufacturing conforms to international standards such as IEC, UL, ANSI, CCC, JIS, and KS.

We also provide Total Solutions that encompass customized designs and more advanced technology, as well as efficient production and installation, and highly accurate testing and analysis of power equipment.

Chonan Plant (Korea)

Wuxi Plant (China)

Automation Industry |
Automation Equipment, Industrial IT & RFID

LSIS, a leading pioneer of the domestic automation business, developed the first ever PLC, Inverter (AC Drive), and DCS in Korean automation history. We now provide Total Solutions through the diverse application of our own products, ranging from controllers to control systems that are based on sophisticated technology and proven experience, to bring innovative change to distribution systems and logistics.

Susol Low voltage circuit breakers

Susol LV circuit breakers

Super Solution

Contents :

Overview	A-1
Main characteristics	A-2
Accessories	A-3
Mounting & connection	A-4
Characteristics curves	A-5
Dimensions	A-6
Technical information	A-7

Susol
MCCB

GOOD DESIGN
Ministry of Commerce

iF
product
design
award
2007

■ Design for technical strong point: The Susol MCCB

SuSol Series MCCB is available forworld best breaking capacity up to 150kA, and MS is seal structure for hidden electricity Arc.
SuSol product represents simultaneously simple and complicated design for using cut diamond motive to emphasis on the hardness of industrial product.
And we applied the identity of product image by designing same concept MCCB and MS which is installed to cubicle.

SuSol Series acquire the competitive power through getting the picking up GD product and wining IF Design Award.

Super Solution

For power distribution

- The highest breaking capacity
- Optimum coordination technique (Cascading & discrimination)
- Powerful engineering tools

For protection of motor & its control device

- Optimal overload protection
- Guaranteed type-2 coordination between circuit breaker and contactor, relay

For controlling and disconnecting circuits

For extensive applications

- Wide range of optimized auxiliaries and accessories

Global Leading Products

Circuit breakers

For protection of power distribution

A-2-1

Circuit breakers

For protection of motor &
its control device

A-2-57

Disconnecting switches

For controlling and
disconnecting circuits

A-2-61

Susol

Super solution

- **Super** Performance
- **Super** Breaking capacity
- **Super** Optimum coordination
- **Super** Extensive applications

Susol TE, TD, TS series

Circuit breakers and Disconnecting switches

Susol circuit breakers provide superior performance in a compact package. They are used in cascade rated systems, allowing the use of lower interruption circuit breakers downstream, which lead to lower system cost.
While meeting IEC60947-2 service and interrupting ratings, these breakers provide unmatched flexibility by employing a wide variety of trip units including fixed thermal & magnetic, adjustable thermal-fixed magnetic, adjustable thermal adjustable magnetic, and electronic options.
Susol TE and TD circuit breaker is available in one frame size in ratings from 16 to 160 amperes and TS circuit breakers are available in three frame sizes in ratings from 40 to 1600 amperes and in interrupting capacities up to 150 kA at 415V AC.
Standard calibration is at 40°C with optional 55℃ factory calibration available for applications where higher ambient temperatures are encountered.

Susol MCCB Communication

- **Communication interface:RS485 (ModBUS)**
- **Transmittable data :**
  - Reading of protection settings
  - The highest current of the three phases
  - Measurement: R, S, T and N phase current (RMS)
  - Fault reading: Type of fault, Fault phase
- **The setting of communication address**
  By using TR button and LCD display (Ammeter)
- **ZSI Enable/Occurrence**
- **Power source: DC24V Power is required**

Providing optimal solution

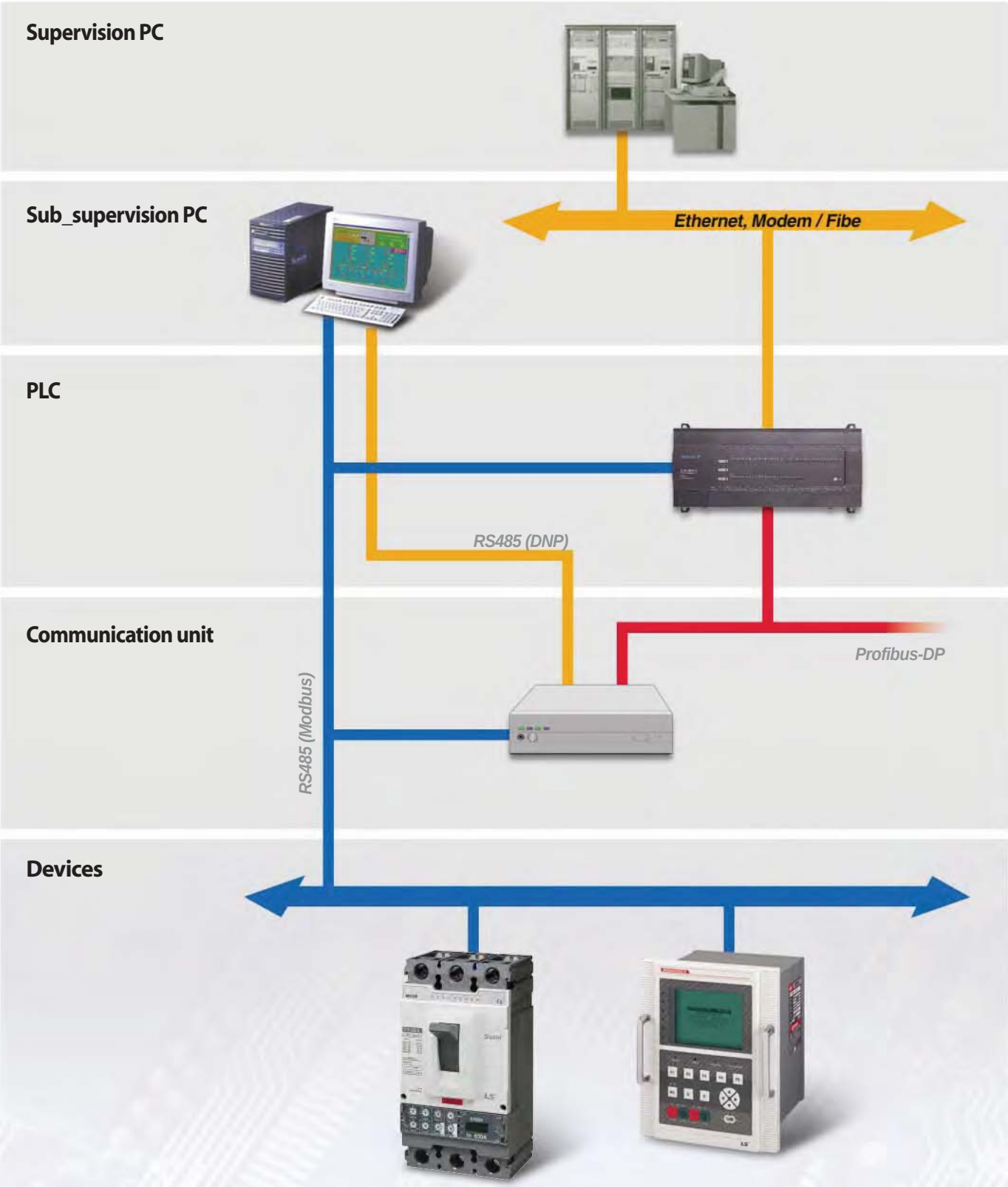

- MCCB(MODBUS) ➡ CU ➡ Profibus_DP ➡ PLC ➡ EtherNET ➡ Supervision PC
- MCCB(MODBUS) ➡ PLC ➡ EtherNET ➡ Supervision PC
- MCCB(MODBUS) ➡ CU ➡ RS485(DNP) ➡ SUB_Supervision PC
- MCCB(MODBUS) ➡ SUB_Supervision PC

Susol MCCB Residual Current Devices

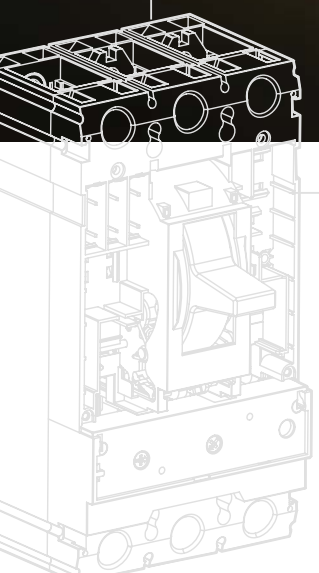

■ Protection against earth leakage currents

The Susol circuit breaker can offer protection against earth leakage currents by using an add-on residual current device (RCD). RCD unit interfaces directly below the circuit breaker trip unit area without the use of any secondary wiring or connections

Residual Current Devices
RTU23, RTU33 and RTU43 for TS type MCCBs

Apart from the protection against overloads typical of automatic circuit breakers, the residual current circuit breaker derived from them also guarantee protection of people against earth leakage currents, thereby ensuring protection against direct contacts, indirect contacts and fire hazards.-(ELCB)

The RCD unit has numerous current and time settings and an override blocking the time settings when set to 30mA. The earth leakage test button tests the electrical and mechanical operation of the device. In order to allow for a dielectric test of the breaker and RCD combination without damaging the electronics, the dielectric plug is placed within the setting area.

The RCD unit may be equipped with an alarm switch (FAL) to remotely indicate tripping due to an earth leakage current.

		RTU23	RTU33	RTU43
Number of poles		3*	3*	3*
Applicable circuit breaker	TS100	■		
	TS160	■		
	TS250	■		
	TS400		■	
	TS630		■	
	TS800			■
Protection charicteristics				
Sensitivity	I△n(A)	(adjustable) 0.03-0.3-1-3-10	(adjustable) 0.03-0.3-1-3-10	(adjustable) 0.03-0.3-1-3-10
Time delay **	Intentional time delay(ms)	(adjustable) 0-60-150-300-600	(adjustable) 0-60-150-300-600	(adjustable) 0-60-150-300-600
	Max. breaking time(ms)	(adjustable) 40-140-240-450-880	(adjustable) 40-140-240-450-880	(adjustable) 40-140-240-450-880
Rated voltage	AC 50/60 Hz	220~460V / 460~690V	220~460V / 460~690V	220~460V / 460~690V

* 3P modules may also be used on 2P circuit breakers.
** If the sensitivity is set to 30mA, the time delay setting is reduced to zero.

Susol MCCB Main characteristics

Susol series circuit breakers are suitable for

- Protection of power distribution
- Protection of motor & its control device
- Controlling and disconnecting circuits

Optimum technical support for

(Cascading, Discrimination, Type 2 coordination)

- Selecting economical protection system
- Quarantee safety of the installation
- Reducing the stress on components and damage
- Guarantee service continuity

MCCB
Susol
TS 1600H
1600A

MCCB
Susol
TS 630L
630A
40°C
3P

MCCB
Susol
TS 250L
250A
40°C
3P

MC-3
Susol

MCCB
Susol
TS 250L
250A
40°C
3P

MC-3
Susol
MT-63
Susol

MCCB
Susol
TS 1600H
1600A
TS 250L
TS 630L
TS 160L

A-1. Overview

Range of LS low voltage circuit breakers A-1-1
General A-1-3
Standard & Approval A-1-4
Structure A-1-5
Marking and configuration A-1-7
Overview of trip unit A-1-9
Switching mechanism A-1-11
Degree of protection A-1-12
Ordering A-1-13

Range of LS low voltage circuit breakers

Susol

	Main switchboard	
Type of circuit breaker	ACB	MCCB
Rated current, In	630~6300A	1000~1600A
Breaking capacity, Icu	65~150kA	50~150kA
Service breaking capacity (% Icu),Ics	100%	75~100%
Utilization category	B	A, B
Applied standard	IEC 60947-2	IEC 60947-2
Image of circuit breaker		
Brand name	Susol/Metasol	Susol
Image of brand	Susol·Metasol	Susol
Series	AH, AS, AN	TS

* 1pole MCCB

Range of LS low voltage circuit breakers

Susol

Main / Sub switchboard		Final distribution
MCCB MCCB		MCB
16~800A 3~1200A		1~125A
37~150kA 10~85kA		6~10kA
100% 100%		50~100%
A	A	A
IEC 60947-2, UL489	IEC 60947-2	IEC60898, 60947-2, UL1077
Susol	Metasol	
Susol	Metasol	
TE, TD, TS	AB series	BK series

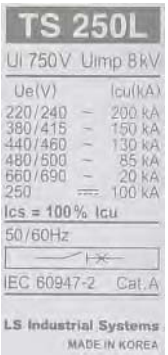

Molded Case Circuit Breakers

The new series of Susol circuit-breakers is available in four frame sizes
: 160, 250, 630, 800, 1600AF
The breakers are able to cover a range of service currents up to 1600A and are available in the fixed version and plug-in version.
The breaking capacities, at 380/415V, are classified by following letters:

S: 37kA for 100 and 160AF
N: 50kA for 160, 250 and 1600AF
65kA for 630 and 800AF
H: 75kA for 1600AF
85kA for 160, 250 and 630AF
100kA for 800AF
L: 150kA for 160, 250, 630, 800 and 1600AF

Susol circuit-breakers are climate-proof. The breakers are intended for use in rooms where there are no excessive operating conditions (e.g. dust, corrosive vapors, gases).
If the circuit-breakers are used in dusty or humid locations, suitable enclosures should be provided. Sufficient fresh air supply must be provided if there are harmful gases (e.g. hydrogen-sulfide vapor) in the ambient air.

All Susol circuit breakers offer positive contact indication and are suitable for isolation in compliance with standards IEC 60947-1 and 2.

Susol circuit-breakers are suitable for protection of
- Power distribution systems supplied by transformers or generators
- Motor and generator

A switch-disconnector of Susol circuit breakers is available for for circuit control and isolation.

Susol series circuit breakers and auxiliaries comply with the following international standard:

IEC 60947-1

Low-voltage switchgear and controlgear
- Part 1: General rules

IEC 60947-2

Low-voltage switchgear and controlgear
- Part 2: Circuit-breakers

IEC 60947-3

Low-voltage switchgear and controlgear
- Part 3: Switches, disconnectors, switchdisconnectors and fuse-combination units

IEC 60947-4

Low-voltage switchgear and controlgear
- Part 4-1: Contactors and motor-starters
  Electromechanical contactors and motor starters Switches, disconnectors, switchdisconnectors
- Part 4-2: Contactors and motor-starters
  AC semiconductor motor controllers and starters
- Part 4-3: Contactors and motor-starters
  AC semiconductor controllers and contactors for non-motor loads

The following certificates are available on a request.
- CE Declaration of conformity
- Certificate of conformance test (CB) - IEC 60947
- Full type test report issued by KEMA
- Certificate of conformance test - CCC (China)
- Letter of origin

CE conformity marking

The CE conformity marking shall indicate conformity to all the obligations imposed on the manufacturer, as regards his products, by virtue of the European Community directives providing for the affixing of the CE marking.
When the CE marking is affixed on a product, it represents a declaration of the manufacturer or of his authorized representative that the product in question conforms to all the applicable provisions including the conformity assessment procedures. This prevents the Member States from limiting the marketing and putting into service of products bearing the CE marking, unless this measure is justified by the proved non-conformity of the product.

IECEE CB SCHEME

The IECEE CB Scheme is the world's first truly international system for acceptance of test reports dealing with the safety of electrical and electronic products. It is a multilateral agreement among participating countries and certification organizations. A manufacturer utilizing a CB test report issued by one of these organizations can obtain national certification in all other member countries of the CB Scheme.
The Scheme is based on the use of international (IEC) Standards. If some members' national standards are not yet completely harmonized with IEC Standards, national differences are permitted if clearly declared to all other members. The CB Scheme utilizes CB Test Certificates to attest that product samples have successfully passed the appropriate tests and are in compliance with the requirements of the relevant IEC Standard and with the declared national differences of various member countries.
The main objective of the Scheme, is to facilitate trade by promoting harmonization of the national standards with international Standards and cooperation among product certifiers worldwide in order to bring product manufacturers a step closer to the ideal concept of "one product, one test, one mark, where applicable'.

Structure

Susol

The primary components are: a switching mechanism, an automatic tripping device (and manual trip button), contacts, an arc-extinguishing device, terminals and a molded case.

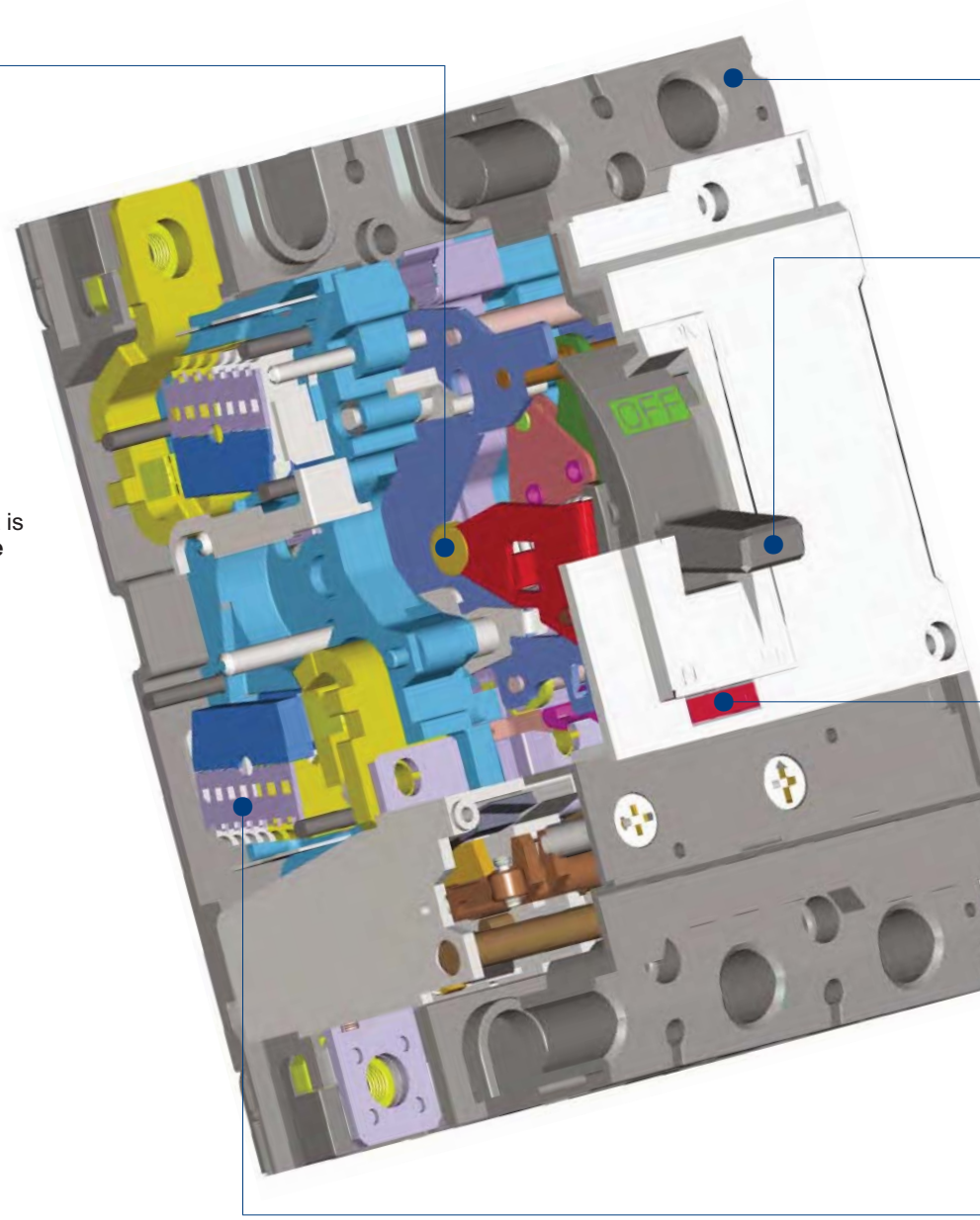

Mechanism unit

- Unvarying contact force regardless of over travel
- RTA (Rapid Toggle Area)
  Open speed of moving contact is rapid by **optimized cam curve** regardless of trip signal

Optimized cam curve

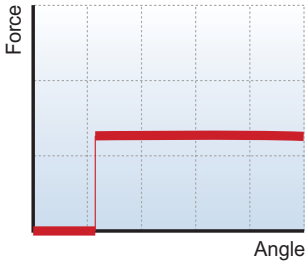

Unvarying contact force

Structure

Susol

Molded case

- UL94 V-0 flame retarded
- High strength

Handle

- Function of indications
  - “ON” “OFF” “TRIP”
- Resetting
  When the handle indicates "tripped" position it must first be reset by moving the handle to the “OFF” position and then closing is possible
- Trip-Free even if the handle is held at “ON”, the breaker will trip if an over current flows
- Suitable for Verification of the main contact position under abnormal conditions because the handle doesn’t indicate open position

Trip button (push to trip)

- Enables tripping mechanically from outside, for confirming the operation of the accessory switches and the manual resetting function.

Note) Fault Alarm Switch, FAL is not operated by trip button.
FAL is applicable only to the breakers with electronic trip units.

Arc-Extinguishing unit

- PASQ Type Quenching Chamber
- Very superior to increasing arc voltage during short time
- PASQ ;
  - Puffer Assisted Self-Quenching
  - Patented by LSIS

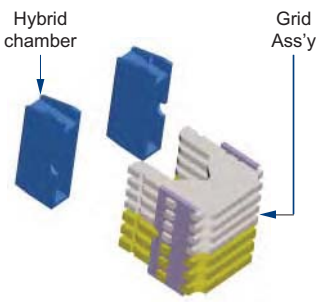

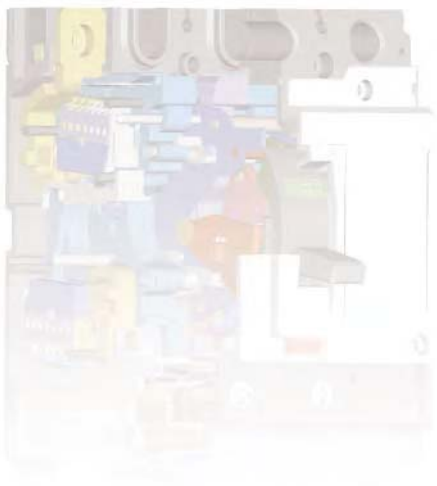

Marking and configuration

Susol

Rated frequency

Standard

Manufacturer

Utilization category

Symbol indicating
suitability for isolation
as defined by IEC 947-2

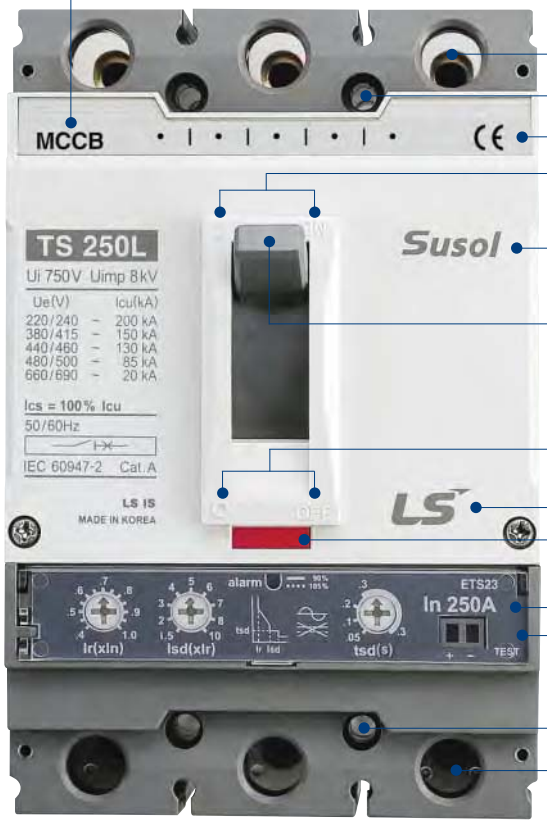

Marking and configuration

Susol

Model (Rating and breaking capacity)

- TS: Series
- 250: Max. Ampere rating
- S: Standard
- N: Normal (Standard)
- H: High
- L: Current limiting

Standardized characteristics:

- Ui: Rated insulation voltage
- Uimp: Impulse withstand voltage
- Ue: Rated operational voltage
- Icu: Ultimate breaking capacity
- Ics: Service breaking capacity

	160AF	250AF	630AF	800AF	1600AF
S	TE100S TE160S	-	-	-	-
N	TE100N TE160N TD100N TD160N	TS100N TS160N TS250N -	TS400N TS630N -	TS800N - -	TS1000N TS1250N TS1600N -
H	TD100H TD160H -	TS100H TS160H TS250H	TS400H TS630H -	TS800H - -	TS1000H TS1250H TS1600H
L	TD100L TD160L -	TS100L TS160L TS250L	TS400L TS630L -	TS800L - -	TS1000L - -

S	37kA	-	-	-	-
N	50kA	50kA	65kA	65kA	50kA
H	85kA	85kA	85kA	100kA	70kA
L	150kA	150kA	150kA	150kA	150kA

Product: Molded Case Circuit Breaker

Upstream connections

Fixing hole

Certificate plate

Indication of closed (I/ON) position

Brand name

Operating handle

Indication of open (O/OFF) position

Company logo

"push to trip" button

Rating of trip unit

Trip unit

Fixing hole

Downstream connections

Overview of trip units

Susol

On Susol circuit breakers, the thermal-magnetic and electronic trip units are interchangeable and may be rapidly fitted to the circuit breakers.
It is therefore easy to change the protection of a given circuit following a modification in an installation. On TS400 and 630 circuit breakers, the electronic trip units are interchangeable plug-in modules. Trip unit ETM offers a large number of protection settings.

Each Trip devices has different types of protection depending on the associated trip unit:

- Standard protection
- Protection of networks supplied by line distribution
- Protection of long cables
- Protection of DC networks
- Protection of motor-starters
- Service connection circuit breaker (for special subscriber contracts)

Susol TD100, TD160 circuit breakers may be equipped with either FTU or FMU.
The trip units are not interchangeable types and can be supplied only after fixed with circuit breakers.

Ampere ratings

MCCB frame type	Type of trip unit	Rated current, In[A]						
		Thermal magnetic release				Electronic release		DSU
		FTU	FMU	ATU	MTU	ETS	ETM	
TE100 TD100	Built in unit	16, 20, 25, 32, 40, 50, 63, 80, 100	16, 20, 25, 32, 40, 50, 63, 80, 100	-	-	-	-	-
TE160 TD160	Built in unit	100, 125, 160	100, 125, 160	-	-	-	-	160
TS100	Inter changeable trip unit	40, 50, 63, 80, 100	40, 50, 63, 80, 100	-	1.6, 3.2, 6.3, 12, 20, 32, 50, 63, 100	40, 80	-	100
TS160	Inter changeable trip unit	100, 125, 160	100, 125, 160	125, 160	32, 50, 63, 100, 160	40, 80, 160	-	160
TS250	Inter changeable trip unit	125, 160, 200, 250	125, 160, 200, 250	125, 160, 200, 250	100, 160, 220	40, 80, 160, 250	-	250
TS400	Inter changeable trip unit	300, 400	300, 400	300, 400	320	160, 250, 400	160, 250, 400	400
TS630	Inter changeable trip unit	500, 630	500, 630	500, 630	500	160, 250, 400, 630	160, 250, 400, 630	630
TS800	Inter changeable trip unit	700, 800	800	800	630	630, 800	630, 800	800

Types of trip units

FTU	• Fixed thermal, Fixed magnetic
FMU	• Adjustable thermal, Fixed magnetic
ATU	• Adjustable thermal, Adjustable magnetic
MTU	• Magnetic only
ETS	• Electronic (LSI)
ETM	• Electronic (LSIG, Ammeter, Communication, Zone selective interlocking)
DSU	• Disconnecting switch

Overview of trip units

Susol

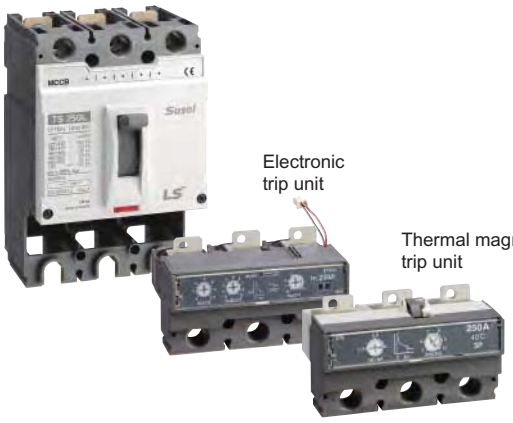

Trip unit identification

TS250 **FMU**

Trip unit function

MCCB frame type

FTU **Fixed-thermal, fixed-magnetic**

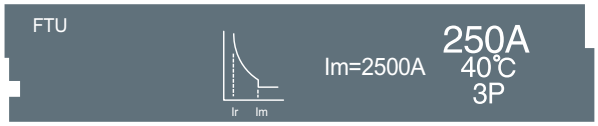

FMU **Adjustable-thermal, fixed-magnetic**

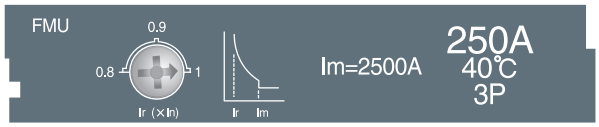

ATU **Adjustable-thermal, adjustable-magnetic**

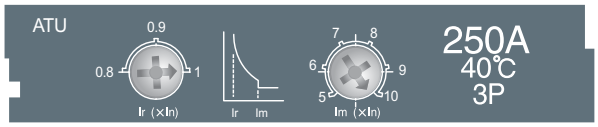

MTU **Magnetic only**

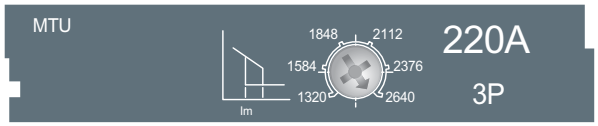

DSU **Disconnecting switch**

ETS **Electronic (LSI)**

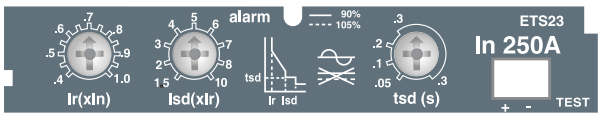

ETM **Electronic (LSIG, multi-function unit)**

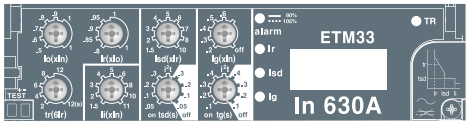

Double contactor structure

Optimize

Repulsion force

Shape of contactor

- Induce easily the arc mobility to grid direction
- Rapidly redeploy the arc from moving contactor
- Prevent contact tip from erosion

Open speed & contact force

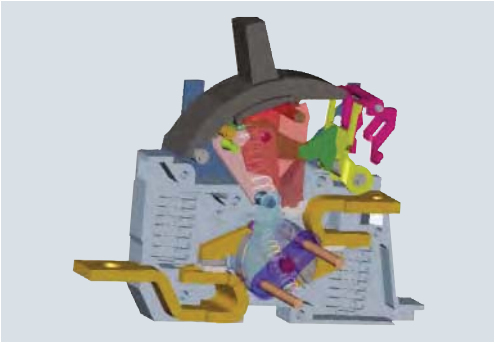

Fig. 3 “ON“ position

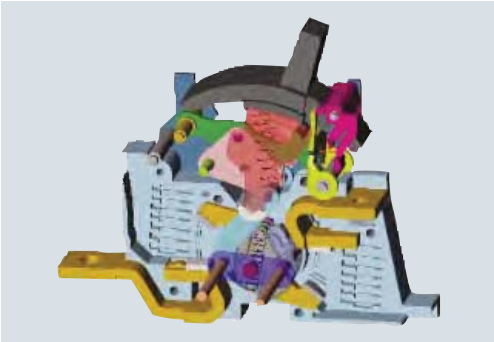

Fig. 4 “OFF“ position

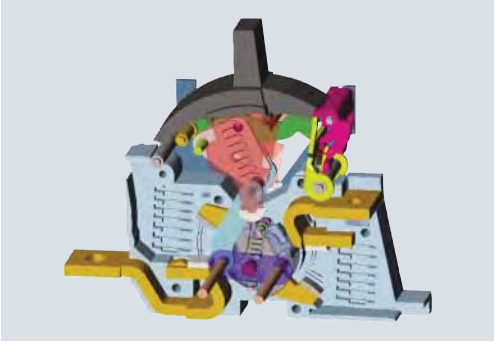

Fig. 5 “TRIP“ position

ON position

- Unvarying contact force regardless of over travel
- Open speed of moving contact is rapid by optimized cam curve regardless of trip signal
- Function of trip free

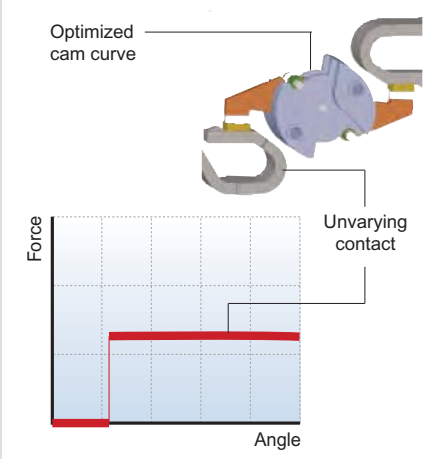

OFF position

- Push to trip in OFF position
  * Reset pin moment < Main spring moment
- Stability of endurance

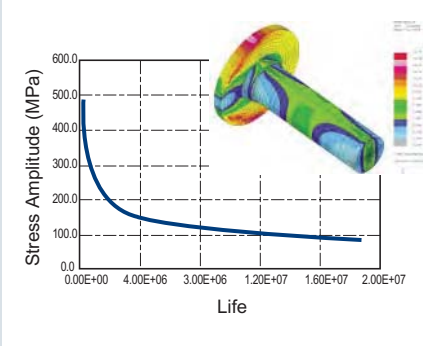

TRIP position

- Enables tripping mechanically from outside, for confirming the operation of the accessory switches and the manual resetting function

Degree of protection

The table indicates the degrees of protection guaranteed by Susol circuit-breakers according to several type of installation. Basically, the fixed parts are always preset with IP20 degree of protection.
IP65 degree of protection can be obtained with the circuit-breaker installed in a switchboard fitted with an extended rotary handle operating mechanism transmitted on the compartment door.

Type	Degree of protection	IP	Protection of persons against access to hazardo us parts with:
Circuit breaker	Full penetration of 12.5mm diameter sphere not allowed. The jointed test finger shall have adequate clearance from hazardous parts	IP20	Wire
Circuit breaker with terminal cover	The access probe of 2.5mm diameter shall not penetrate.	IP30	Wire
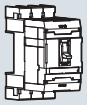 Plug-in circuit breaker	Full penetration of 12.5mm diameter sphere not allowed. The jointed test finger shall have adequate clearance from hazardous parts. * When the circuit breaker is installed and the supplied covers are mounted.	IP20 or IP30	Wire
Circuit breaker with cover frame for door cutout	The access probe of 1.0mm shall not penetrate.	IP40	Wire
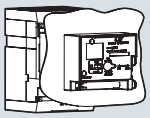 Circuit breaker with cover frame and motor operator	The access probe of 1.0mm diameter shall not penetrate.	IP40	Wire
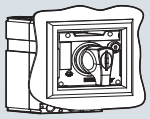 Circuit breaker with cover frame and rotary direct handle	The access probe of 1.0mm diameter shall not penetrate.	IP40	Wire
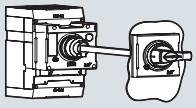 Circuit breaker with cover frame and rotary extended handle	Totally protected against ingress of dust and water jets fromany direction	IP65	Wire

Susol TE, TD, TS up to 800AF MCCB

Trip unit: FTU, ATU, FMU, ETS, ETM

TS250 | N | FTU | 250 | 3 | - | AX

Ampere frame	
TE	100
	160
TD	100
	160
TS	100
	160
	250
	400
	630
	800

Type	
S	Standard
N	Normal
H	High
L	Current limit

Trip unit		
Thermal magnetic trip unit	FTU	Fixed Trip Unit
	FMU	Fixed Magnetic Trip Unit
	ATU	Adjustable Trip Unit
Electronic trip units	ETS	Electronic Trip Unit Standard
	ETM	Electronic Trip Unit Multi Function

Rated current

Poles	
2P	2Pole
3P	3Pole
4P*	4Pole

Note) 4Pole MCCB of TS100 to 800A have N-R-S-T and R-S-T-N both N phase way. Electric trip unit type is only available 3Pole

-	Standard
P	Plug-in

Note) Plug in type is only available 3Pole

Accessories

Note) Please refer to A-3

Trip unit: MTU

TS250 | N | MTU | 220 | 3 | - | AX

Ampere frame	
TS	100
	160
	250
	400
	630
	800

Type	
N	Normal
H	High
L	Current limit

Magnetic only trip unit

Rated current

Poles	
3P	3Pole

-	Standard
P	Plug-in

Accessories

Note) Please refer to A-3

AF	Rated current
TS100	1.6, 3.2, 6.3, 12, 20, 32, 50, 63, 100
TS160	32, 50, 63, 80, 100, 160
TS250	100, 160, 220
TS400	320
TS630	500
TS800	630

Trip unit: DSU

TS250 — Ampere frame

TD	160
TS	100
	160
	250
	400
	630
	800

NA — MCCB

DTU — Disconnect Switch Unit

250 — Rated current

AF	Rated current
TD160	160
TS100	100
TS160	160
TS250	250
TS400	400
TS630	630
TS800	800

3 — Poles

3P	3Pole

-

-	Standard
P	Plug-in

Susol TS 1600AF MCCB

TS1600 N A 1600A 3 - -

Ampere frame	
TS	1000
	1250
	1600

Trip relay	
N	Normal
A	Ammeter
P	Power meter
S	Supreme meter

Poles	
3P	3Pole
4P	4Pole

Connection type	
-	Standard
REAR	Rear Connection

Type	
N	Normal
H	High
L	Current limit
NA	Switch-disconnector

Rated current
800A
1000A
1250A
1600A

N phase way (4Pole)	
L	N-R-S-T
R	R-S-T-N

Trip relay

N	G	O
Trip relay type	Communication & protection	Control voltage & frequency

000	Without trip relay

N		G		0	
N	Normal	G	Without comm. + L/S/I/G	0	Self-Power, 60Hz
				5	Self-Power, 50Hz

* L/S/I/G configuration as standard
-with LED indicators
-without output contacts
* Ground fault system by vector sum

A		G		0	
A	Ammeter	G	Without comm.	0	Self-Power, 60Hz
		Z	Without comm. + Earth leakage	1	AC/DC 100V~250V, 60Hz
		E	Without comm. + Earth leakage	2	DC 24V~60V, 60Hz
		C	Comm.	5	Self-Power, 50Hz
		K	Comm. + Earth leakage	6	AC/DC 100V~250V, 50Hz
		X	Comm. + Earth leakage	7	DC 24V~60V, 50Hz

* L/S/I/G configuration as standard
* Ground fault system by vector sum(G,C)
* Earth leakage system
- Z,K: External CT - LS ZCT applied(fault current 0.5~30A, 1600AF)
- E,X: External CT - Private ZCT applied(fault current >30A)
* Comm. And output contacts DO NOT work under self-power condition.
(Only checking LED available)

P		C		1	
P	Power meter	C	Comm.	1	AC/DC 100V~250V, 60Hz
		K	Comm. + Earth leakage	2	DC 24V~60V, 60Hz
		X	Comm. + Earth leakage	6	AC/DC 100V~250V, 50Hz
		A	Comm. + Pre-trip alarm	7	DC 24V~60V, 50Hz

* L/S/I/G configuration as standard
* Ground fault system by vector sum
* Earth leakage system
- K: External CT - LS ZCT applied(fault current 0.5~30A, 1600AF)
- X: External CT - Private ZCT applied(fault current >30A)
* Applicable to generator protection purpose
* Comm. And output contacts DO NOT work under self-power condition.
(Only checking LED available)

S		C		1	
S	Supreme meter	C	Comm.	1	AC/DC 100V~250V, 60Hz
		K	Comm. + Earth leakage	2	DC 24V~60V, 60Hz
		X	Comm. + Earth leakage	6	AC/DC 100V~250V, 50Hz
		A	Comm. + Pre-trip alarm	7	DC 24V~60V, 50Hz

* L/S/I/G configuration as standard
* Ground fault system by vector sum
* Earth leakage system
- K: External CT - LS ZCT applied(fault current 0.5~30A, 1600AF)
- X: External CT - Private ZCT applied(fault current >30A)
* Applicable to generator protection purpose
* Comm. And output contacts DO NOT work under self-power condition.
(Only checking LED available)

Note) 1. L/S/I/G configuration as standard
2. Ground fault, earth leakage and pre-trip alarm functions are alternative.
3. The functions like Metering, Communication, ZSI, Remote reset and Digital output are NOT available only under Self-power condition.
4. Voltage module should be required for P and S types(supplied separately)

MCCB
TS 250L
Susol
LS
250A
40°C
3P
Im=2500A
In 250A

A-2. Main characteristics

MCCBs for power distribution up to 800A

Electrical characteristics A-2-1
Thermal magnetic trip unit
Overview A-2-3
FTU, FMU for TE100, TE160, TD100, TD160 ..... A-2-5
FTU, FMU for TS100, TS160, TS250 ..... A-2-7
ATU for TS160, TS250
FTU, FMU, ATU for TS400, TS630 ..... A-2-11
FTU, FMU, ATU for TS800 ..... A-2-15
Electronic trip units (Standard)
Overview A-2-17
ETS23 for TS100, TS160, TS250 ..... A-2-19
ETS33 for TS400, TS630 ..... A-2-25
ETS43 for TS800 ..... A-2-31
Electronic trip units (Multifunction)
Overview A-2-37
ETM33 for TS400, TS630 ..... A-2-40
ETM43 for TS800 ..... A-2-49
MCCBs for motor protection
Electrical characteristics A-2-57
Magnetic only trip unit A-2-59
Switch-Disconnectors
Electrical characteristics A-2-61
Susol MCCB for DC Application A-2-63
4 pole MCCB with electronic trip unit A-2-68

MCCBs for power distribution up to 1600A

Electrical characteristics A-2-69
OCR(Over current relays) Trip unit
Overview A-2-70
N(Normal), NV type A-2-71
A(Ammeter) type A-2-73
P(Power meter) type A-2-75
S(Supreme meter) type A-2-77
Operation characteristic A-2-79
Measurement function A-2-81
ZSI -Zone Selective Interlocking (A, P, S type) A-2-82
Remote reset and digital I/O (A, P, S type) A-2-83
Communication A-2-84
Event & fault recording (P, S type) A-2-85
System information A-2-85
System block diagram A-2-86
Installation and Handling A-2-87

MCCBs for power distribution

Susol

Electrical characteristics

			TE100		TE160		TD100			TD160		
Frame size		[AF]	100		160		100 160					
Rated current, In ♣		[A]	16~100		100,125,160		16, 20, 25, 32, 40, 50, 63, 80, 100			1P: 16, 20, 25, 32, 40, 50, 63, 80, 100,125, 160 2, 3P: 100, 125, 160		
No. of poles			3,4		3,4		2*, 3, 4			1, 2*, 3, 4		
Rated operational voltage, Ue	AC	[V]	690		690		690 240(1P),			690		
	DC	[V]	500		500		500 250(1P),			500		
Rated impulse withstand voltage, Uimp		[kV]	8		8		8			8		
Rated insulation voltage, Ui		[V]	750		750		750 750					
Rated ultimate short-circuit breaking capacity, Icu			S	N	S	N	N	H	L	N	H	L
AC 50/60Hz	220/240V [kA]		50	85	50	85	85 100		200	30(1P) 85 100	50(1P)	200
	380/415V [kA]		37	50	37	50	50 85		150	50	85	150
	440/460V	[kA]	25	37	25	37	50 70		130	50	70	130
	480/500V [kA]		18	25	18	25	30 50		65	30	50	65
	660/690V [kA]		6	8	6	8	5	8	10 5		8	10
DC 250V		[kA]	37	50	37	50	42	65 100		16(1P) 42 65	25(1P)	100
	500V(2poles in series)	[kA]	37	50	37	50	42 65		100	42	65	100
Rated service breaking capacity, Ics		[%Icu]	100%	100%	100%	100%	100%	100%	100%	100%	100%	100%
Rated short-circuit making capacity Icm												
AC 50/60Hz	220/240V	[kA]	105	187	105	187	187 220		440	105(1P) 187 220	105(1P)	440
	380/415V	[kA]	77.7	105	77.7	105	105 187		330	105	187	330
	440/460V	[kA]	52.5	77.7	52.5	77.7	105 154		286	105	154	286
	480/500V	[kA]	36	52.5	36	52.5	63	105 143		63	105	143
	660/690V	[kA]	9.2	13.6	9.2	13.6	8	14 17		8	14	17
Category of utilization			A		A		A			A		
Isolation behavior			●		●		●			●		
Trip unit (release)												
Thermal-Magnetic												
●fixed-thermal, fixed-magnetic		FTU	●		●		●			●		
●adjustable-thermal, fixed-magnetic		FMU	●		●		●			●**		
●adjustable-thermal, adjustable-magnetic		ATU	-		-		-			-		
●magnetic only		MTU	-		-		-			-		
Electronic												
●LSI ETS			-		-		-			-		
●LSI		ETM	-		-		-			-		
Option	Earth-fault protection, Ig		-		-		-			-		
	Zone selective interlocking, ZSI		-		-		-			-		
	Ammeter		-		-		-			-		
	Communication		-		-		-			-		
	Earth-leakage protection module		-		-		-			-		
Connection	fixed	front-connection	●		●		●			●		
		rear-connection	●		●		●			●**		
	plug-in	front-connection	-		-		●			●**		
		rear-connection	-		-		●			●**		
Mechanical life		[operations]	25000		25000		25000 25000					
Electrical life @ 415 V AC		[operations]	10000		10000		10000			10000		
Basic dimensions, W×H×D (front connection)	1-pole	[mm]	-		-		-			35×140×86		
	3-pole	[mm]	76×130×82		76×130×82		90×140×86			90×140×86		
	4-pole [mm]		101×130×82		101×130×82		120×140×86			120×140×86		
Weight 1-pole (front connection)		[kg]	-		-		-			0.57		
	3-pole	[kg]	1.05		1.05		1.5			1.5		
	4-pole	[kg]	1.35		1.35		1.8			1.8		
Reference standard			IEC60947-2		IEC60947-2		IEC60947-2			IEC60947-2		

※ Breaking capacity at 660/690V is for your reference. (not certified)

♣Applicable to MCCBs equipped with FTU, FMU, ATU

** Not applicable to 1pole

* 2 pole MCCB in 3pole frame size

MCCBs for power distribution

Susol

	TS100			TS160			TS250			TS400			TS630			TS800		
	100			160			250			400			630			800		
	40, 50, 63, 80, 100			(100)※, 125, 160			125, 160, 200, 250			300, 400			500, 630			800		
	2*, 3, 4			2*, 3, 4			2*, 3, 4			2*, 3, 4			2*, 3, 4			2*, 3, 4		
	690			690			690			690			690			690		
	500			500			500			500			500			500		
	8			8			8			8			8			8		
	750			750			750			750			750 750					
	N	H	L	N	H	L	N	H	L	N	H	L	N	H	L	N	H	L
	100	120	200	100	120	200	100	120	200	100	120	200	100	120	200	100	120	200
	50	85	150	50	85	150	50	85	150	65	85	150	65	85	150	65	100	150
	50	70	130	50	70	130	50	70	130	65	85	130	65	85	130	65	100	130
	42	65	85	42	65	85	42	65	85	42	65	85	42	65	85	42	85	100
	10	15	20	10	15	20	10	15	20	10	20	35	10	20	35	10	20	35
	50	85	100	50	85	100	50	85	100	50	85	100	50	85	100	50	85	100
	50	85	100	50	85	100	50	85	100	50	85	100	50	85	100	50	85	100
	100%	100%	100%	100%	100%	100%	100%	100%	100%	100%	100%	100%	100%	100%	100%	100%	100%	100%
	220	264	440	220	264	440	220	264	440	220	264	440	220	264	440	220	264	440
	105	187	330	105	187	330	105	187	330	143	187	330	143	187	330	143	220	330
	105	154	286	105	154	286	105	154	286	143	187	286	143	187	286	143	220	286
	88	143	187	88	143	187	88	143	187	88	143	187	88	143	187	88	187	220
	17	30	40	17	30	40	17	30	40	17	40	74	17	40	74	17	40	74
	A			A			A			A			A			A		
	●			●			●			●			●			●		
	●			●			●			●			●			●		
	●			●			●			●			●			●		
	-			●			●			●			●			●		
	●			●			●			●			●			●		
	●			●			●			●			●			●		
	-			-			-			●			●			●		
	-			-			-			●			●			●		
	-			-			-			●			●			●		
	-			-			-			●			●			●		
	-			-			-			●			●			●		
	-			-			-			●			●			●		
	●			●			●			●			●			●		
	●			●			●			●			●			●		
	●			●			●			●			●			●		
	●			●			●			●			●			●		
	25000			25000			25000 20000						20000			10000		
	10000			10000 10000						6000			6000			3000		
	-			-			-			-			-			-		
	105×160×86			105×160×86 105			×160×86 140			×260×110 140			×260×110 210			×320×135		
	140×160×86			140×160×86 140			×160×86 186.5			×260×110 186.5			×260×110 280			×320×135		
	-			-			-			-			-			-		
	2			2			2			5.4 5.4						15.1		
	2.6			2.6 2.6						7.2			7.2			19.6		
	IEC60947-2			IEC60947-2			IEC60947-2			IEC60947-2			IEC60947-2			IEC60947-2		

※ The trip unit ATU is available from 125A

Thermal magnetic trip units
Overview

Susol series circuit breakers can be installed with thermal magnetic trip units.
And, there are two kinds of trip units according to way of installation as follows.
- Built-in trip units for TE and TD series upto 160A
- Interchangeable trip units for TS series upto 800A

Function

Protection of power distribution
- Overload protection: Thermal protection with a fixed or adjustable threshold
- Short-circuit protection: Magnetic protection with a fixed or adjustable pick-up
- Protection of the fourth pole
  4P3T type (neutral unprotected)
  4P4T type 50% (neutral protection at 0.5×In)
  4P4T type 100% (neutral protection at 1×In)

Operation

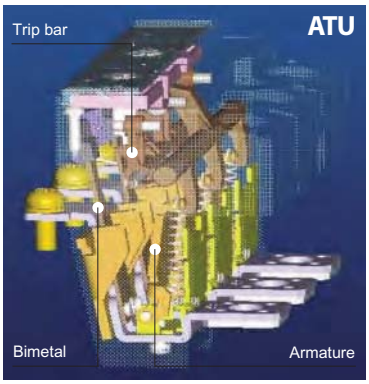

Thermal magnetic types
- Time-Delay operation
  An overcurrent heats and warps the bimetal to actuate the trip bar by the bimetal characteristic.
- Instantaneous operation
  If the overcurrent is excessive, the armature is attracted and the trip bar actuated by electromagnetic force.

Ratings

Ratings(A)		Thermal magnetic trip units(FTU/FMU/ATU) TE100 to TS800																	
	at 40℃ In	16	20	25	32	40	50	63	80	100	125	160	200	250	300	400	500	630	800
	TE100	●	●	●	●	●	●	●	●	●	-	-	-	-	-	-	-	-	-
	TD100	●	●	●	●	●	●	●	●	●	-	-	-	-	-	-	-	-	-
	TE160	-	-	-	-	-	-	-	-	●	●	●	-	-	-	-	-	-	-
	TD160	-	-	-	-	-	-	-	-	●	●	●	-	-	-	-	-	-	-
	TS100	-	-	-	-	●	●	●	●	●	-	-	-	-	-	-	-	-	-
	TS160	-	-	-	-	-	-	-	-	●	●	●	-	-	-	-	-	-	-
	TS250	-	-	-	-	-	-	-	-	-	●	●	●	●	-	-	-	-	-
	TS400	-	-	-	-	-	-	-	-	-	-	-	-	-	●	●	-	-	-
	TS630	-	-	-	-	-	-	-	-	-	-	-	-	-	-	-	●	●	-
	TS800	-	-	-	-	-	-	-	-	-	-	-	-	-	-	-	-	-	●

Note) Rated current 700A is available for TS800FTU.

Thermal magnetic trip units
Overview

Characteristics

Fixed thermal, fixed magnetic trip units

FTU

- Fixed thermal
  16A ... 800A rated currents
- Fixed magnetic
  400A ... 8000A tripping currents
- Applicable to TE100 ... TS800 frames

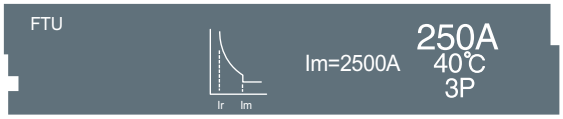

Adjustable thermal, fixed magnetic trip units

FMU

- Adjustable thermal
  16A ... 800A rated currents
  Adjustable : 0.8~1×In
- Fixed magnetic
  400A ... 8000A tripping currents
- Applicable to TE100 ... TS800 frames

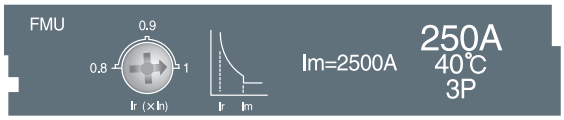

Adjustable thermal, adjustable magnetic trip units

ATU

- Adjustable thermal
  100A ... 800A rated currents
  Adjustable : 0.8~1×In
- Adjustable magnetic
  500A ... 8000A tripping currents
  Adjustable : 5~10×In
- Applicable to TS160 ... TS800 frames

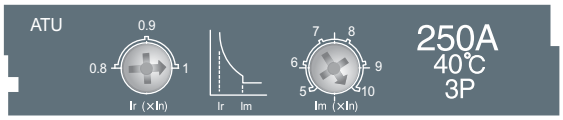

Thermal magnetic trip units
FTU, FMU for TE100, TD100, TE160, TD160

Configuration

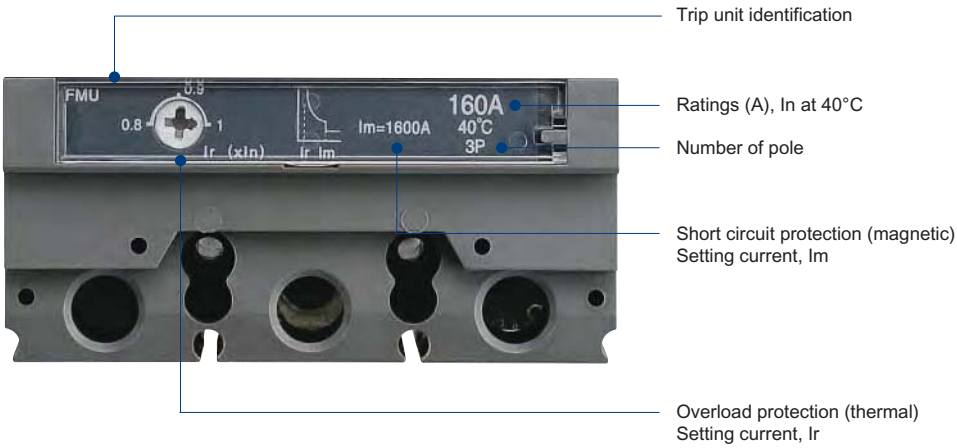

TE100 FTU, TD100 FTU, TE160 FTU, TD160 FTU

- Fixed thermal & magnetic trip unit

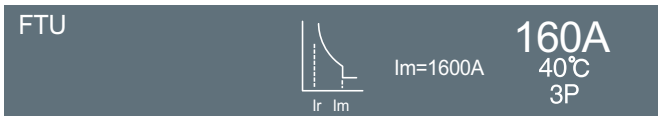

TE100 FMU, TD100 FMU, TE160 FMU, TD160 FMU

- Adjustable thermal & fixed magnetic trip unit

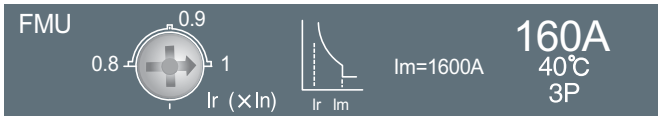

TE100 FTU, TD100 FTU, TE160 FTU, TD160 FTU

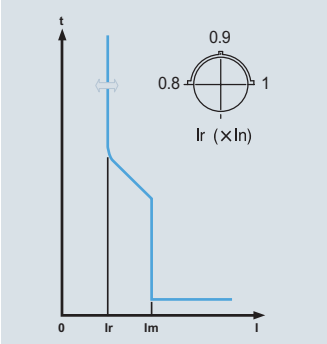

Catalogue numbering system

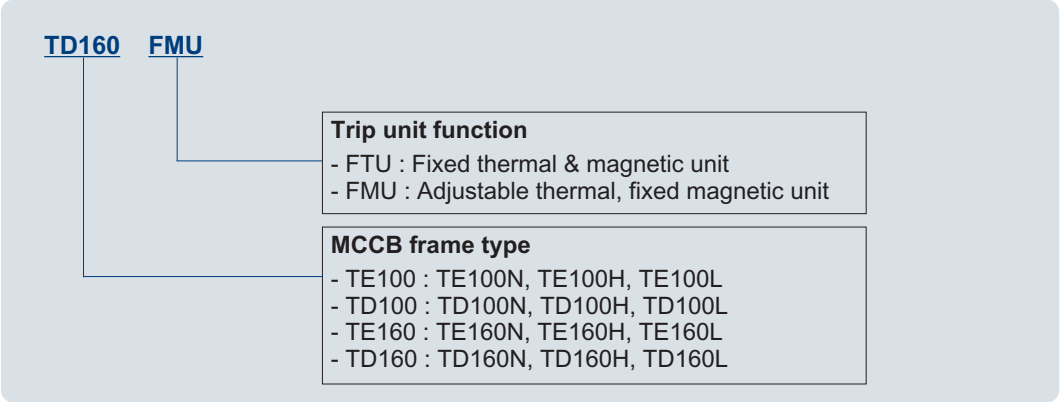

Thermal magnetic trip units
FTU, FMU for TE100, TD100, TE160, TD160

Characteristics

Thermal magnetic trip units(FTU/FMU) ... TE100, TD100, TE160, TD160												
Rating(A)	at 40℃ In	16	20	25	32	40	50	63	80	100	125	160
	TE/TD100	●	●	●	●	●	●	●	●	●	-	-
	TE/TD160	-	-	-	-	-	-	-	-	●	●	●

Overload protection(thermal)		
Current setting(A) Ir		
	FTU	Fixed
	FMU	Adjustable 0.8, 0.9, 1×In (3 settings)

Short - circuit protection(magnetic)			
Current setting(A) Im			
	FTU	Fixed 400A	Fixed 10×In
	FMU	Fixed 400A	Fixed 10×In

Protection of N pole		
	4P3T	Neutral No protection
	4P4T	Neutral protection (100% Ir)

Setting details

Thermal overload protection

Trip unit type	Setting Ir 16	Trip unit rating, In (A)									
		20	25	32	40	50	63	80	100	125	160
TE/TD100FTU	Fixed 16	20	25	32	40	50	63	80	100	-	-
TE/TD100FMU	0.8 12.8	16	20	25.6	32	40	50.4	64	80	-	-
	0.9	14.4 18 22.5		28.8	36	45	56.7	72	90	-	-
	1	16 20	25	32	40	50	63	80	100	-	-
TE/TD160FTU	Fixed	- - -		-	-	-	-	-	100	125	160
TE/TD160FMU	0.8	- - -		-	-	-	-	-	80	100	128
	0.9	- - -		-	-	-	-	-	90	112.5	144
	1	- - -		-	-	-	-	-	100	125	160

Magnetic short-circuit protection

Trip unit type	Setting current, Ir	Setting current, Im	Trip unit rating, In (A)										
			16	20	25	32	40	50	63	80	100	125	160
TE/TD100FTU		Fixed In ×10	400	400	400	400	400	500	630	800	1000	-	-
TE/TD100FMU	0.8×In	Fixed In ×10	400	400	400	400	400	500	630	800	1000	-	-
	0.9×In	Fixed In×10	400	400	400	400	400	500	630	800	1000	-	-
	1.0×In	Fixed In ×10	400	400	400	400	400	500	630	800	1000	-	-
TE/TD160FTU		Fixed In ×10 -		-	-	-	-	-	-	-	1000	1250	1600
TE/TD160FMU	0.8×In	Fixed In ×10 -		-	-	-	-	-	-	-	1000	1250	1600
	0.9×In	Fixed In ×10	-	- -		-	-	-	-	-	1000	1250	1600
	1.0×In	Fixed In ×10	-	- -		-	-	-	-	-	1000	1250	1600

Thermal magnetic trip units
FTU, FMU for TS100, TS160, TS250
ATU for TS160, TS250

Configuration

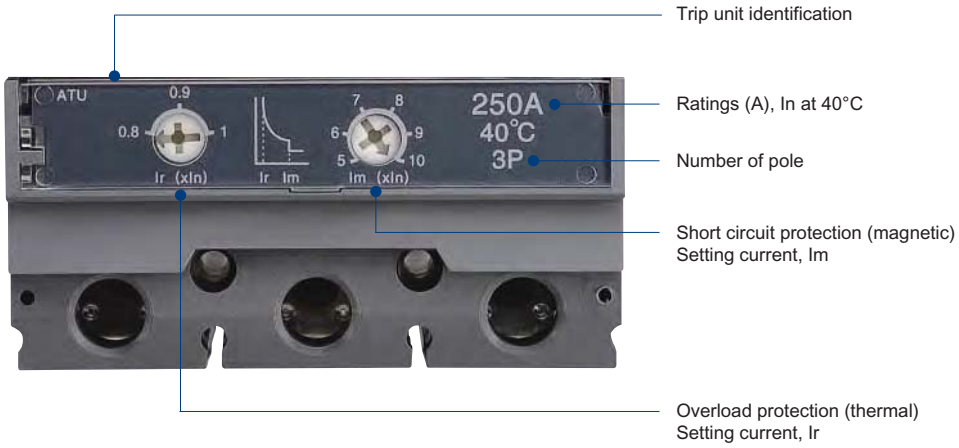

TS100 FTU, TS160 FTU, TS250 FTU

- Fixed thermal fixed magnetic trip unit

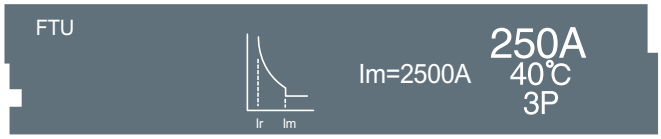

TS100 FMU, TS160 FMU, TS250 FMU

- Adjustable thermal fixed magnetic trip unit

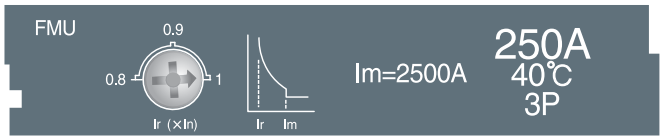

TS160 ATU, TS250 ATU

- Adjustable thermal adjustable magnetic trip unit

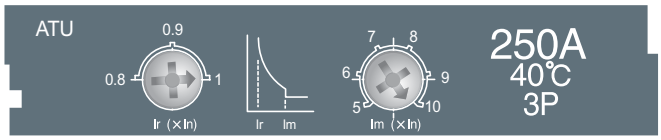

TS100 FMU, TS160 FMU, TS250 FMU

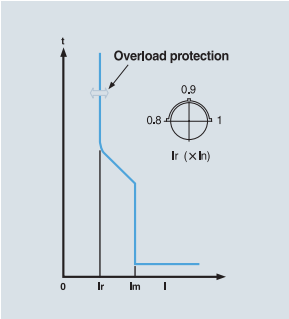

TS160 ATU, TS250 ATU

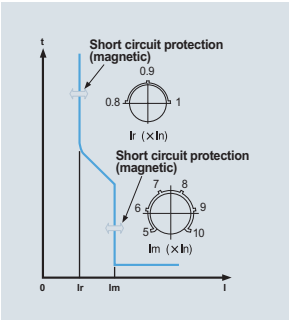

Thermal magnetic trip units
FTU, FMU for TS100, TS160, TS250
ATU for TS160, TS250

Characteristics

Thermal Magnetic trip units(FTU/FMU/ATU) ... TS100 to TS250										
Rating(A)	at 40℃ In	40	50	63	80	100	125	160	200	250
	TS100	●	●	●	●	●	-	-	-	-
	TS160	-	-	-	-	●	●	●	-	-
	TS250	-	-	-	-	-	●	●	●	●

Overload protection(thermal)		
Current setting(A) Ir		
	FTU	Fixed
	FMU	Adjustable 0.8 to × In
	ATU	Adjustable 0.8 to × In

Short - circuit protection(magnetic)		
Current setting(A) Im		
	FTU	Fixed 10 × In
	FMU	Fixed 10 × In
	ATU	Adjustable 5, 6, 7, 8, 9, 10 × In (6 settings)

Protection of N pole		
	4P3T	Neutral No protection
	4P4T	Neutral protection (100% Ir)

Catalogue numbering system

TS250 FTU

Trip unit function
- FTU: Fixed thermal, fixed magnetic unit

MCCB frame type
- TS100: TS100N, TS100H, TS100L
- TS160: TS160N, TS160H, TS160L
- TS250: TS250N, TS250H, TS250L

TS250 FMU

Trip unit function
- FMU: Adjustable thermal, fixed magnetic unit

MCCB frame type
- TS100: TS100N, TS100H, TS100L
- TS160: TS160N, TS160H, TS160L
- TS250: TS250N, TS250H, TS250L

TS250 ATU

Trip unit function
- ATU: Adjustable thermal, adjustable magnetic unit

MCCB frame type
- TS160: TS160N, TS160H, TS160L
- TS250: TS250N, TS250H, TS250L

The trip unit ATU is available from 125A

Thermal magnetic trip units
FTU, FMU for TS100, TS160, TS250
ATU for TS160, TS250

Setting details

Thermal overload protection

Trip unit type	Setting Ir	Trip unit rating, In (A)								
		40 50		63	80	100	125	160	200	250
TS100FTU	Fixed 40		50	63	80	100	-	-	-	-
TS100FMU	0.8×In	32	40	50	64	80	-	-	-	-
	0.9×In	36	45	57	72	90	-	-	-	-
	1.0×In	40	50	63	80	100	-	-	-	-
TS160FTU	Fixed	-	-	-	-	100 125		160	-	-
TS160FMU	0.8×In	-	-	-	-	80 100		128	-	-
	0.9×In	-	-	-	-	90	113	144	-	-
	1.0×In	-	-	-	-	100 125		160	-	-
TS160ATU	0.8×In	-	-	-	-	-	100	128	-	-
	0.9×In	-	-	-	-	-	113	144	-	-
	1.0×In	-	-	-	-	-	125 160		-	-
TS250FTU	Fixed -		-	-	-	-	125	160	200	250
TS250FMU	0.8×In	-	-	-	-	-	100	128	160 200	
	0.9×In	-	-	-	-	-	113	144 180		225
	1.0×In	-	-	-	-	-	125	160 200		250
TS250ATU	0.8×In	-	-	-	-	-	100	128	160 200	
	0.9×In	-	-	-	-	-	113	144 180		225
	1.0×In	-	-	-	-	-	125	160 200		250

Thermal magnetic trip units
FTU, FMU for TS100, TS160, TS250
ATU for TS160, TS250

Setting details

Magnetic short-circuit protection

Trip unit type	Setting current, Ir	Setting current, Im		Trip unit rating, In (A)								
				40	50	63	80	100	125	160	200	250
TS100FTU		Fixed	In×10	400	500	630	800	1000	-	-	-	-
TS100FMU	0.8×In	Fixed	In×10	400	500	630	800	1000	-	-	-	-
	0.9×In	Fixed	In×10	400	500	630	800	1000	-	-	-	-
	1.0×In	Fixed	In×10	400	500	630	800	1000	-	-	-	-
TS160FTU		Fixed	In×10	-	-	-	-	1000	1250	1600		
TS160FMU	0.8×In	Fixed	In×10	-	-	-	-	1000	1250	1600	-	-
	0.9×In	Fixed	In×10	-	-	-	-	1000	1250	1600	-	-
	1.0×In	Fixed	In×10	-	-	-	-	1000	1250	1600	-	-
TS160ATU	0.8×In	Adjustable	In×5	-	-	-	-	-	625	800	-	-
			In×6	-	-	-	-	-	750	960	-	-
			In×7	-	-	-	-	-	875	1120	-	-
			In×8	-	-	-	-	-	1000	1280	-	-
			In×9	-	-	-	-	-	1125	1440	-	-
			In×10	-	-	-	-	-	1250	1600	-	-
	0.9×In	Adjustable	In×5	-	-	-	-	-	625	800	-	-
			In×6	-	-	-	-	-	750	960	-	-
			In×7	-	-	-	-	-	875	1120	-	-
			In×8	-	-	-	-	-	1000	1280	-	-
			In×9	-	-	-	-	-	1125	1440	-	-
			In×10	-	-	-	-	-	1250	1600	-	-
	1.0×In	Adjustable	In×5	-	-	-	-	-	625	800	-	-
			In×6	-	-	-	-	-	750	960	-	-
			In×7	-	-	-	-	-	875	1120	-	-
			In×8	-	-	-	-	-	1000	1280	-	-
			In×9	-	-	-	-	-	1125	1440	-	-
			In×10	-	-	-	-	-	1250	1600	-	-
TS250FTU		Fixed	In×10	-	-	-	-	-	1250	1600	2000	2500
TS250FMU	0.8×In	Fixed	In×10	-	-	-	-	-	1250	1600	2000	2500
	0.9×In	Fixed	In×10	-	-	-	-	-	1250	1600	2000	2500
	1.0×In	Fixed	In×10	-	-	-	-	-	1250	1600	2000	2500
TS250ATU	0.8×In	Adjustable	In×5	-	-	-	-	-	625	800	1000	1250
			In×6	-	-	-	-	-	750	960	1200	1500
			In×7	-	-	-	-	-	875	1120	1400	1750
			In×8	-	-	-	-	-	1000	1280	1600	2000
			In×9	-	-	-	-	-	1125	1440	1800	2250
			In×10	-	-	-	-	-	1250	1600	2000	2500
	0.9×In	Adjustable	In×5	-	-	-	-	-	625	800	1000	1250
			In×6	-	-	-	-	-	750	960	1200	1500
			In×7	-	-	-	-	-	875	1120	1400	1750
			In×8	-	-	-	-	-	1000	1280	1600	2000
			In×9	-	-	-	-	-	1125	1440	1800	2250
			In×10	-	-	-	-	-	1250	1600	2000	2500
	1.0×In	Adjustable	In×5	-	-	-	-	-	625	800	1000	1250
			In×6	-	-	-	-	-	750	960	1200	1500
			In×7	-	-	-	-	-	875	1120	1400	1750
			In×8	-	-	-	-	-	1000	1280	1600	2000
			In×9	-	-	-	-	-	1125	1440	1800	2250
			In×10	-	-	-	-	-	1250	1600	2000	2500

Thermal magnetic trip units
FTU, FMU, ATU for TS400, TS630

Configuration

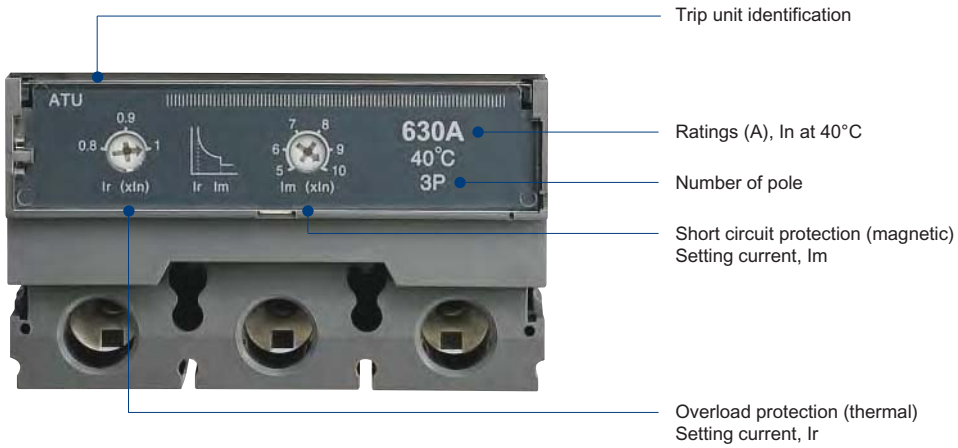

TS400 FTU, TS630 FTU

- Fixed thermal fixed magnetic trip unit

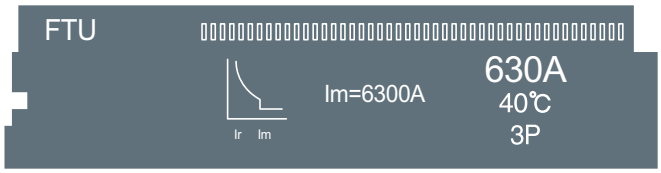

TS400 FMU, TS630 FMU

- Adjustable thermal fixed magnetic trip unit

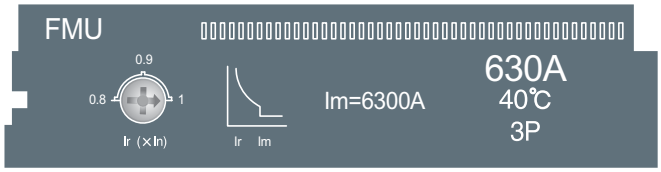

TS400 ATU, TS630 ATU

- Adjustable thermal adjustable magnetic trip unit

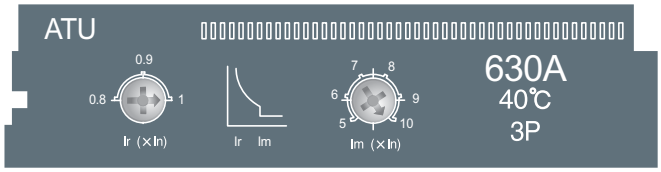

TS400 FMU, TS630 FMU

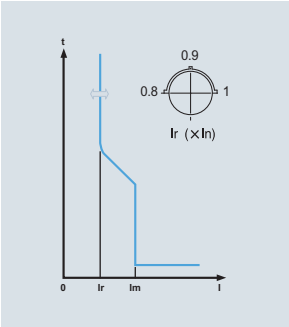

TS400 ATU, TS630 ATU

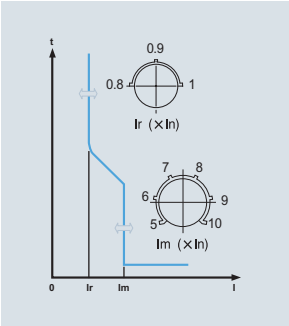

Thermal magnetic trip units FTU, FMU, ATU for TS400, TS630

Characteristics

Thermal Magnetic trip units(FTU/FMU/ATU) ... TS400 to TS630					
Rating(A) at 40℃ In		300	400	500	630
	TS400	●	●	-	-
	TS630 -		-	●	●

Overload protection(thermal)		
Current setting(A) Ir		
	FTU	In=Ir (Fixed)
	FMU	Adjustable 0.8, 0.9, 1×In (3 settings)
	ATU	Adjustable 0.8, 0.9, 1×In (3 settings)

Short - circuit protection(magnetic)		
Current setting(A) Im		
	FTU	Fixed 10×In
	FMU	Fixed 10×In
	ATU	Adjustable 5, 6, 7, 8, 9,10×In(6 settings)

Protection of N pole		
	4P3T	Neutral No protection
	4P4T	Neutral protection (100% Ir)

Catalogue numbering system

TS630 **ATU**

Trip unit function
- FTU : Fixed thermal & magnetic unit
- FMU : Adjustable thermal & fixed magnetic unit
- ATU : Adjustable thermal & adjustable magnetic unit

MCCB frame type
- TS400 : TS400N, TS400H, TS400L
- TS630 : TS630N, TS630H, TS630L

Thermal magnetic trip units
FTU, FMU, ATU for TS400, TS630

Setting details

Thermal overload protection

Trip unit type	Setting	Trip unit rating, In (A)			
	Ir 300		400	500	630
TS400FTU	Fixed 300		400	-	-
TS400FMU	0.8 240		320	-	-
	0.9 270		360	-	-
	1	300 400		-	-
TS400ATU	0.8 240		320	-	-
	0.9 270		360	-	-
	1	300 400		-	-
TS630FTU	Fixed	-	-	500 630	
TS630FMU	0.8	-	-	400	504
	0.9	-	-	450	567
	1	-	-	500	630
TS630ATU	0.8	-	-	400	504
	0.9	-	-	450	567
	1	-	-	500	630

Thermal magnetic trip units FTU, FMU, ATU for TS400, TS630

Setting details

Magnetic short-circuit protection

Trip unit type	Setting current, Ir	Setting current, Im		Trip unit rating, In (A) 300	400	500	630
TS400FTU		Fixed	In×10	3000	4000	-	-
TS400FMU	0.8×In	Fixed	In×10	3000	4000	-	-
	0.9×In	Fixed	In×10	3000	4000	-	-
	1.0×In	Fixed	In×10	3000	4000	-	-
TS400ATU	0.8×In	Adjustable	In×5	1500	2000	-	-
			In×6	1800	2400	-	-
			In×7	2100	2800	-	-
			In×8	2400	3200	-	-
			In×9	2700	3600	-	-
			In×10	3000	4000	-	-
	0.9×In	Adjustable	In×5	1500	2000	-	-
			In×6	1800	2400	-	-
			In×7	2100	2800	-	-
			In×8	2400	3200	-	-
			In×9	2700	3600	-	-
			In×10	3000	4000	-	-
	1.0×In	Adjustable	In×5	1500	2000	-	-
			In×6	1800	2400	-	-
			In×7	2100	2800	-	-
			In×8	2400	3200	-	-
			In×9	2700	3600	-	-
			In×10	3000	4000	-	-
TS630FTU		Fixed	In×10	-	-	5000	6300
TS630FMU	0.8×In	Fixed	In×10	-	-	5000	6300
	0.9×In	Fixed	In×10	-	-	5000	6300
	1.0×In	Fixed	In×10	-	-	5000	6300
TS630ATU	0.8×In	Adjustable	In×5	-	-	2500	3150
			In×6	-	-	3000	3780
			In×7	-	-	3500	4410
			In×8	-	-	4000	5040
			In×9	-	-	4500	5670
			In×10	-	-	5000	6300
	0.9×In	Adjustable	In×5	-	-	2500	3150
			In×6	-	-	3000	3780
			In×7	-	-	3500	4410
			In×8	-	-	4000	5040
			In×9	-	-	4500	5670
			In×10	-	-	5000	6300
	1.0×In	Adjustable	In×5	-	-	2500	3150
			In×6	-	-	3000	3780
			In×7	-	-	3500	4410
			In×8	-	-	4000	5040
			In×9	-	-	4500	5670
			In×10	-	-	5000	6300

Thermal magnetic trip units FTU, FMU, ATU for TS800

Configuration

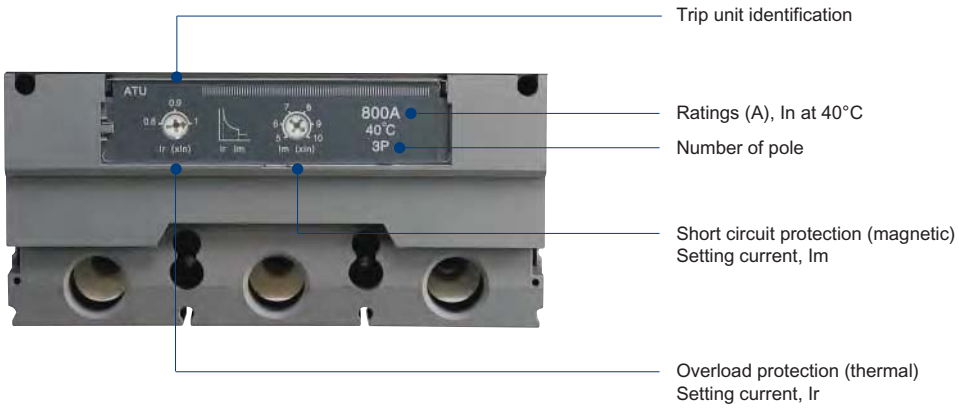

TS800 FTU

- Fixed thermal fixed magnetic trip unit

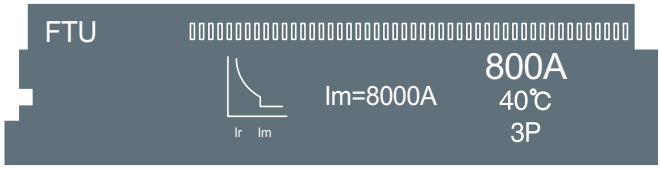

TS800 FMU

- Adjustable thermal fixed magnetic trip unit

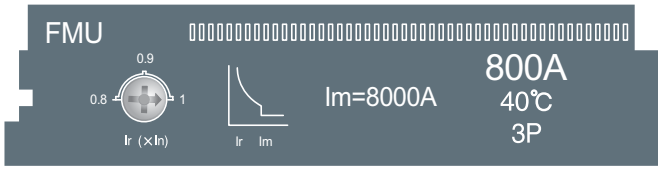

TS800 ATU

- Adjustable thermal adjustable magnetic trip unit

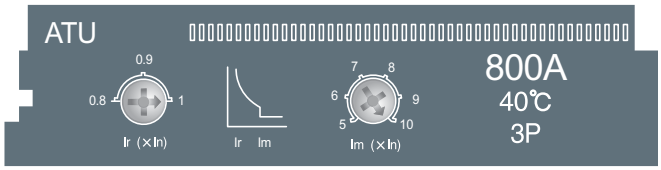

TS800 FMU

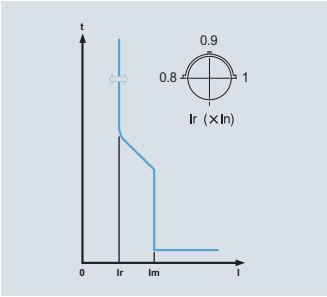

TS800 ATU

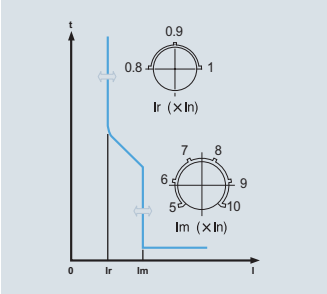

Catalogue numbering system

TS800 ATU

Trip unit function
- FTU : Fixed thermal & magnetic unit
- FMU : Adjustable thermal & fixed magnetic unit
- ATU : Adjustable thermal & adjustable magnetic unit

MCCB frame type
- TS800 : TS800N, TS800H, TS800L

Thermal magnetic trip units FTU, FMU, ATU for TS800

Characteristics

Thermal Magnetic trip units(FTU/FMU/ATU) ... TS800		
Rating(A) at 40℃ In		800
	TS800	●

Overload protection(thermal)		
Current setting(A) Ir		
	FTU	Fixed
	FMU	Adjustable 0.8, 0.9,1×In (3 settings)
	ATU	Adjustable 0.8, 0.9,1×In (3 settings)

Short - circuit protection(magnetic)		
Current setting(A) Im		
	FTU	Fixed 10×In
	FMU	Fixed 10×In
	ATU	Adjustable 5, 6, 7, 8, 9, 10×In (6 settings)

Protection of N pole		
	4P3T	Neutral No protection
	4P4T	Neutral protection (100% Ir)

Setting details

Thermal overload protection

Trip unit type	Setting Ir 800	Trip unit rating, In (A)
TS800FTU	Fixed 800	
TS800FMU	0.8	640
	0.9	720
	1 800	
TS800ATU	0.8 640	
	0.9	720
	1 800	

Magnetic short-circuit protection

Trip unit type	Setting current, Ir	Setting current, Im		Trip unit rating, In (A) 800
TS800FTU		Fixed	In×10	8000
TS800FMU	0.8×In	Fixed	In×10	8000
	0.9×In	Fixed	In×10	8000
	1.0×In	Fixed	In×10	8000
TS800ATU	0.8×In	Adjustable	In×5	4000
			In×6	4800
			In×7	5600
			In×8	6400
			In×9	7200
			In×10	8000
	0.9×In	Adjustable	In×5	4000
			In×6	4800
			In×7	5600
			In×8	6400
			In×9	7200
			In×10	8000
	1.0×In	Adjustable	In×5	4000
			In×6	4800
			In×7	5600
			In×8	6400
			In×9	7200
			In×10	8000

Overview of electronic trip units (Standard type)

Types: ETS23, ETS33, ETS43

3 frame size of circuit breaker: 250AF, 630AF, 800AF

Only three(3) pole circuit breakers are available.

The Trip units can be mounted on circuit breakers of N, H and L type from TS100 to TS800.

Test connector for trip unit (AC/DC 30mA ~ AC/DC 100mA)

Protection

- Overload protection
- Short-circuit protection

Ratings

		Trip units					
		ETS23			ETS33		ETS43
Rated current, In (A)	40	●	●	●	-	-	-
	80	●	●	●	-	-	-
	160	-	●	●	●	●	-
	250	-	-	●	●	●	-
	400	-	-	-	●	●	-
	630	-	-	-	-	●	●
	800	-	-	-	-	-	●
Applicable to		TS100 N/H/L	TS160 N/H/L	TS250 N/H/L	TS400 N/H/L	TS630 N/H/L	TS800 N/H/L

Current setting, Ir(A)

ETS	16	32	40	64	80	100	160	250	320	400	630	800
ETS23 for TS100N/H/L												
ETS23 for TS160N/H/L												
ETS23 for TS250N/H/L												
ETS33 for TS400N/H/L												
ETS33 for TS630N/H/L												
ETS43 for TS800N/H/L												

Setting values

Overload protection (long time)	
Setting current (A), Ir	0.4, 0.45, 0.5, 0.55, 0.6, 0.65, 0.7, 0.75, 0.8, 0.85, 0.9, 0.95, 1.0×In, 13 setting
Tripping time (s)	Fixed at 6×Ir , tolerance±20%

Short-circuit protection (short time)	
Tripping threshold (A), Isd	adjustable 1.5, 2, 3, 4, 5, 6, 7, 8, 10×Ir, 9 setting, tolerance ±15%
Time delay (ms)	adjustable 50, 100, 200, 300, 4 setting, tolerance ±20%

Short circuit protection (Instantaneous)	
Tripping threshold (A), Ii	Fixed at 11×In

Overview of electronic trip units (Standard type)

① Adjustable rated current setting (Ir)

② Adjustable short time delay current setting (Isd)

③ Adjustable time delay setting (tsd)

④ Alarm LED
90% Ir: ON,
105% Ir or more: ON-OFF

⑤ Test connector

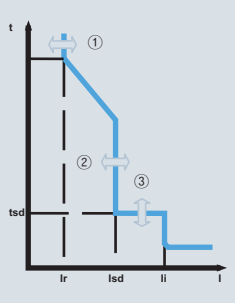

ETS23 for TS100/TS160/TS250

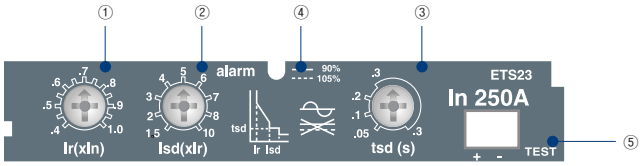

ETS33 for TS400/TS630

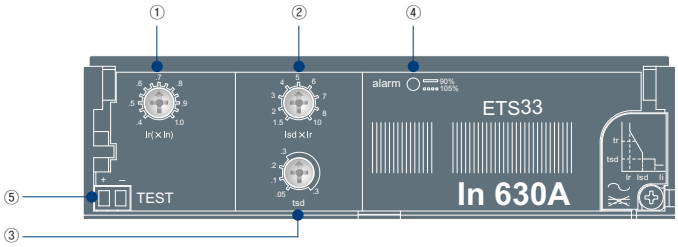

ETS43 for TS800

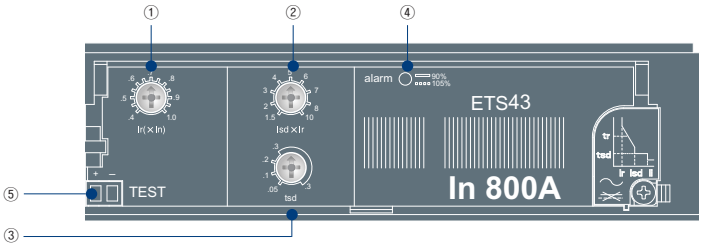

Electronic trip units (Standard)
ETS23 for TS100, TS160, TS250

Configuration

Electronic type, ETS23 for MCCBs TS100, TS160, TS250

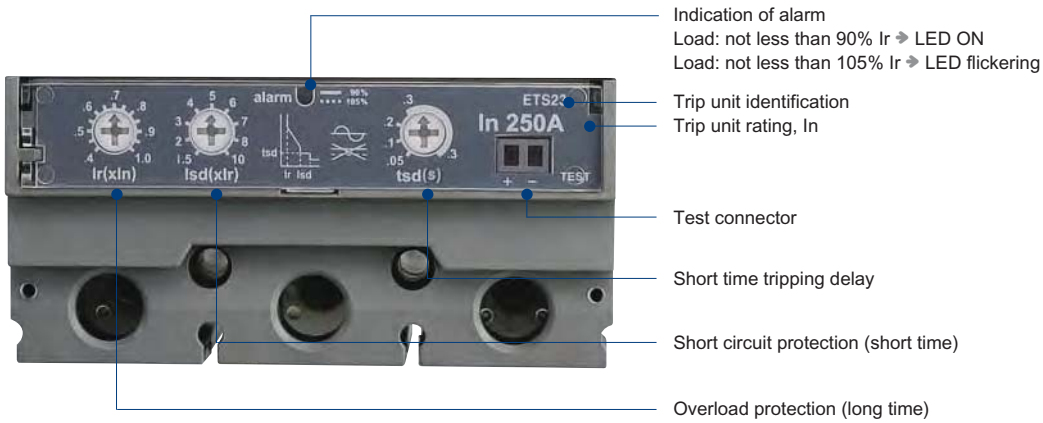

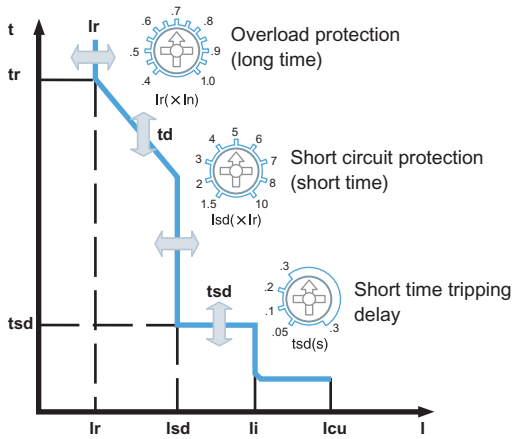

Overload protection (long time)	
Setting current (A), Ir	0.4, 0.45, 0.5, 0.55, 0.6, 0.65, 0.7, 0.75, 0.8, 0.85, 0.9, 0.95, 1.0×In 13 settings
Tripping time (s)	Fixed at 6×Ir , tolerance±20%

Short-circuit protection (short time)						
Tripping threshold (A), (Isd)	1.5, 2, 3, 4, 5, 6, 7, 8, 10×Ir 9 settings, tolerance ±15%					
Time delay (tsd)	setting time (ms)	50	100	200	300	4 settings
	operation time (ms)	30<t≤70	70<t≤140	140<t≤240	240<t≤350	

Short circuit protection (Instantaneous)	
Tripping threshold (A), Ii	Fixed at 11×In

Catalogue numbering system

ETS 23 In250A

Trip unit frame
- 23 for TS100, TS160, TS250
- 33 for TS400, TS630
- 43 for TS800

Rated current, In
- 40, 80A for TS100
- 40, 80, 160A for TS160
- 40, 80, 160, 250A for TS250

Trip unit function
- ETS: Standard electronic trip unit

Electronic trip units (Standard)
ETS23 for TS100, TS160, TS250

Current setting, Ir (A)

Standard electronic trip unit, ETS23

Trip unit	16	32	40	64	80	100	160	250	320	400	630	800
for TS100												
for TS160												
for TS250												

Setting details

Overload protection (long time)

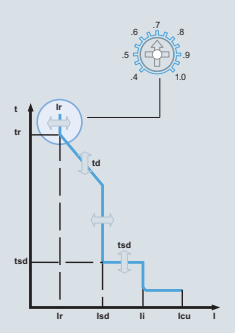

Circuit breakers	TS100		TS160			TS250			
Trip unit rating, In(A)	40	80	40	80	160	40	80	160	250
Setting value	Overload protection setting current Ir = Setting value (0.4~1) × In								
0.4	16	32	16	32	64	16	32	64	100
0.45	18	36	18	36	72	18	36	72	113
0.5	20	40	20	40	80	20	40	80	125
0.55	22	44	22	44	88	22	44	88	138
0.6	24	48	24	48	96	24	48	96	150
0.65	26	52	26	52	104	26	52	104	163
0.7	28	56	28	56	112	28	56	112	175
0.75	30	60	30	60	120	30	60	120	188
0.8	32	64	32	64	128	32	64	128	200
0.85	34	68	34	68	136	34	68	136	213
0.9	36	72	36	72	144	36	72	144	225
0.95	38	76	38	76	152	38	76	152	238
1	40	80	40	80	160	40	80	160	250

Long time tripping delay, td (sec)

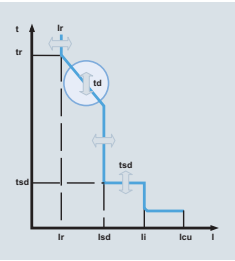

Tripping time (s)	Fixed at 6×Ir tolerance±20%

Electronic trip units (Standard)
ETS23 for TS100, TS160, TS250

Setting details

Short-circuit protection (short time)

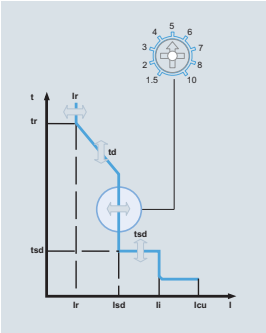

Circuit breakers		TS100		TS160			TS250			
Trip unit rating, In(A)		40	80	40	80	160	40	80	160	250
Setting value		Short time pick-up current setting, Isd = Setting value (1.5~10)×Ir								
0.4 24			48	24	48	96	24	48	96	150
0.45		27 54		27	54	108	27	54	108	169
0.5 30			60	30	60	120	30	60	120	188
0.55 33			66	33	66	132	33	66	132	206
0.6		36 72		36	72	144	36	72	144	225
0.65		39 78		39	78	156	39	78	156	244
0.7	1.5	42	84 42 84			168	42	84	168	263
0.75		45 90		45	90	180	45	90	180	281
0.8 48			96	48	96	192	48	96	192	300
0.85 51			102	51	102	204	51	102	204	319
0.9 54			108	54	108	216	54	108	216	338
0.95 57			114	57	114	228	57	114	228	356
1		60	120	60 120		240	60	120	240	375
0.4		32	64	32	64	128	32	64	128	200
0.45		36	72	36	72	144	36	72	144	225
0.5		40	80	40	80	160	40	80	160	250
0.55		44	88	44	88	176	44	88	176	275
0.6		48	96	48	96	192	48	96	192	300
0.65		52	104	52	104	208	52	104	208	325
0.7	2	56	112	56	112	224	56	112	224	350
0.75		60	120	60	120	240	60	120	240	375
0.8		64	128	64	128	256	64	128	256	400
0.85		68	136	68	136	272	68	136	272	425
0.9		72	144	72	144	288	72	144	288	450
0.95		76	152	76	152	304	76	152	304	475
1		80	160	80	160	320	80	160	320	500
0.4		48	96	48	96	192	48	96	192	300
0.45		54	108	54	108	216	54	108	216	338
0.5		60	120	60	120	240	60	120	240	375
0.55		66	132	66	132	264	66	132	264	413
0.6		72	144	72	144	288	72	144	288	450
0.65		78	156	78	156	312	78	156	312	488
0.7	3	84	168	84	168	336	84	168	336	525
0.75		90	180	90	180	360	90	180	360	563
0.8		96	192	96	192	384	96	192	384	600
0.85		102	204	102	204	408	102	204	408	638
0.9		108	216	108	216	432	108	216	432	675
0.95		114	228	114	228	456	114	228	456	713
1		120	240	120	240	480	120	240	480	750

Electronic trip units (Standard)
ETS23 for TS100, TS160, TS250

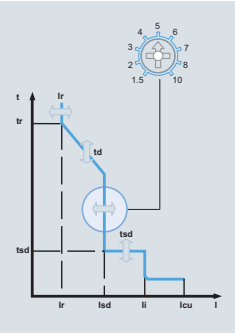

Circuit breakers		TS100		TS160			TS250			
Trip unit rating, In(A)		40	80	40	80	160	40	80	160	250
Setting value		Short time pick-up current setting, Isd = Setting value (1.5~10)×Ir								
0.4	4	64	128	64	128	256	64	128	256	400
0.45		72	144	72	144	288	72	144	288	450
0.5		80	160	80	160	320	80	160	320	500
0.55		88	176	88	176	352	88	176	352	550
0.6		96	192	96	192	384	96	192	384	600
0.65		104	208	104	208	416	104	208	416	650
0.7		112	224	112	224	448	112	224	448	700
0.75		120	240	120	240	480	120	240	480	750
0.8		128	256	128	256	512	128	256	512	800
0.85		136	272	136	272	544	136	272	544	850
0.9		144	288	144	288	576	144	288	576	900
0.95		152	304	152	304	608	152	304	608	950
1		160	320	160	320	640	160	320	640	1000
0.4	5	80	160	80	160	320	80	160	320	500
0.45		90	180	90	180	360	90	180	360	563
0.5		100	200	100	200	400	100	200	400	625
0.55		110	220	110	220	440	110	220	440	688
0.6		120	240	120	240	480	120	240	480	750
0.65		130	260	130	260	520	130	260	520	813
0.7		140	280	140	280	560	140	280	560	875
0.75		150	300	150	300	600	150	300	600	938
0.8		160	320	160	320	640	160	320	640	1000
0.85		170	340	170	340	680	170	340	680	1063
0.9		180	360	180	360	720	180	360	720	1125
0.95		190	380	190	380	760	190	380	760	1188
1		200	400	200	400	800	200	400	800	1250
0.4	6	96	192	96	192	384	96	192	384	600
0.45		108	216	108	216	432	108	216	432	675
0.5		120	240	120	240	480	120	240	480	750
0.55		132	264	132	264	528	132	264	528	825
0.6		144	288	144	288	576	144	288	576	900
0.65		156	312	156	312	624	156	312	624	975
0.7		168	336	168	336	672	168	336	672	1050
0.75		180	360	180	360	720	180	360	720	1125
0.8		192	384	192	384	768	192	384	768	1200
0.85		204	408	204	408	816	204	408	816	1275
0.9		216	432	216	432	864	216	432	864	1350
0.95		228	456	228	456	912	228	456	912	1425
1		240	480	240	480	960	240	480	960	1500

Electronic trip units (Standard)
ETS23 for TS100, TS160, TS250

Setting details

Short-circuit protection (short time)

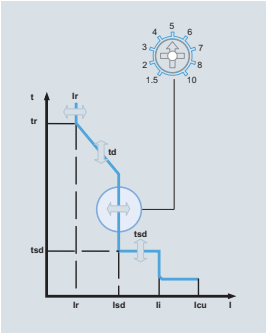

Circuit breakers		TS100		TS160			TS250			
Trip unit rating, In(A)		40	80	40	80	160	40	80	160	250
Setting value		Short time pick-up current setting, Isd = Setting value (1.5~10)×Ir								
0.4	7	112	224	112	224	448	112	224	448	700
0.45		126	252	126	252	504	126	252	504	788
0.5		140	280	140	280	560	140	280	560	875
0.55		154	308	154	308	616	154	308	616	963
0.6		168	336	168	336	672	168	336	672	1050
0.65		182	364	182	364	728	182	364	728	1138
0.7		196	392	196	392	784	196	392	784	1225
0.75		210	420	210	420	840	210	420	840	1313
0.8		224	448	224	448	896	224	448	896	1400
0.85		238	476	238	476	952	238	476	952	1488
0.9		252	504	252	504	1008	252	504	1008	1575
0.95		266	532	266	532	1064	266	532	1064	1663
1		280	560	280	560	1120	280	560	1120	1750
0.4	8	128	256	128	256	512	128	256	512	800
0.45		144	288	144	288	576	144	288	576	900
0.5		160	320	160	320	640	160	320	640	1000
0.55		176	352	176	352	704	176	352	704	1100
0.6		192	384	192	384	768	192	384	768	1200
0.65		208	416	208	416	832	208	416	832	1300
0.7		224	448	224	448	896	224	448	896	1400
0.75		240	480	240	480	960	240	480	960	1500
0.8		256	512	256	512	1024	256	512	1024	1600
0.85		272	544	272	544	1088	272	544	1088	1700
0.9		288	576	288	576	1152	288	576	1152	1800
0.95		304	608	304	608	1216	304	608	1216	1900
1		320	640	320	640	1280	320	640	1280	2000
0.4	10	160	320	160	320	640	160	320	640	1000
0.45		180	360	180	360	720	180	360	720	1125
0.5		200	400	200	400	800	200	400	800	1250
0.55		220	440	220	440	880	220	440	880	1375
0.6		240	480	240	480	960	240	480	960	1500
0.65		260	520	260	520	1040	260	520	1040	1625
0.7		280	560	280	560	1120	280	560	1120	1750
0.75		300	600	300	600	1200	300	600	1200	1875
0.8		320	640	320	640	1280	320	640	1280	2000
0.85		340	680	340	680	1360	340	680	1360	2125
0.9		360	720	360	720	1440	360	720	1440	2250
0.95		380	760	380	760	1520	380	760	1520	2375
1		400	800	400	800	1600	400	800	1600	2500

Electronic trip units (Standard)
ETS23 for TS100, TS160, TS250

Setting details

Short time tripping delay setting, tsd (ms)

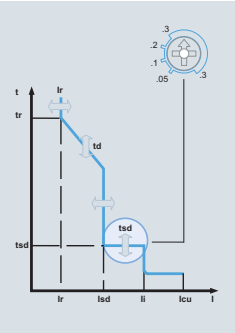

Time delay (tsd)	setting time (ms)	50	100	200	300	4 settings
	operation time (ms)	30<t≤70	70<t≤140	140<t≤240	240<t≤350	

Short circuit protection (Instantaneous), Ii (A)

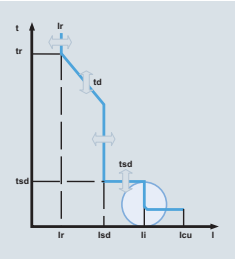

Tripping threshold (A), Ii	Fixed at 11×In

Electronic trip units (Standard)
ETS33 for TS400, TS630

Configuration

Electronic type, ETS33 for MCCBs TS400 & TS630

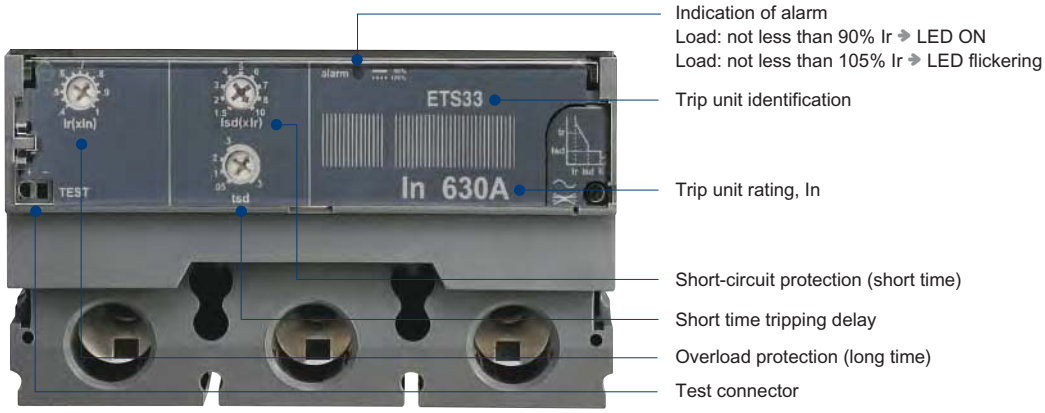

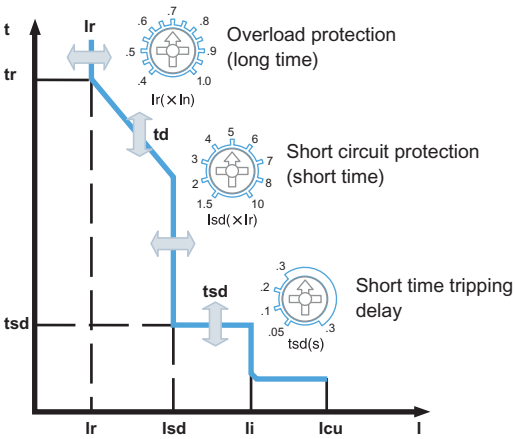

Overload protection (long time)	
Setting current (A), Ir	0.4, 0.45, 0.5, 0.55, 0.6, 0.65, 0.7, 0.75, 0.8, 0.85, 0.9, 0.95, 1.0×In 13 settings
Tripping time (s)	Fixed at 6×Ir , tolerance±20%

Short-circuit protection (short time)						
Tripping threshold (A), (Isd)	1.5, 2, 3, 4, 5, 6, 7, 8, 10×Ir 9 settings, tolerance ±15%					
Time delay (tsd)	setting time (ms)	50	100	200	300	4 settings
	operation time (ms)	30<t≤70	70<t≤140	140<t≤240	240<t≤350	

Short circuit protection (Instantaneous)	
Tripping threshold (A), Ii	Fixed at 11×In

Catalogue numbering system

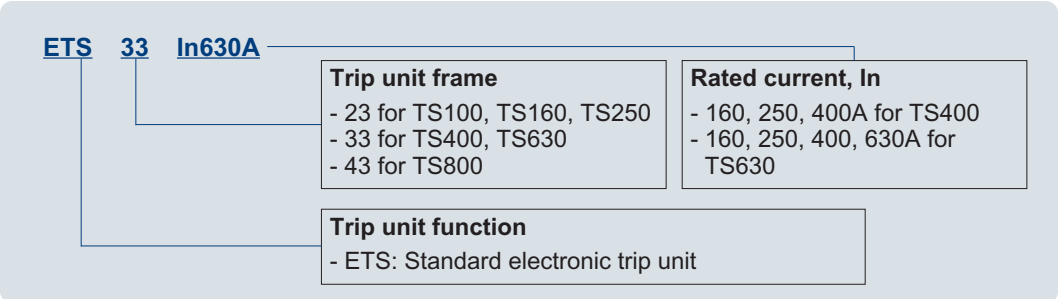

Electronic trip units (Standard)
ETS33 for TS400, TS630

Current setting, Ir (A)

Standard electronic trip unit, ETS33

Trip unit	16	32	40	64	80	100	160	250	320	400	630	800
for TS400												
for TS630												

Setting details

Overload protection (long time)

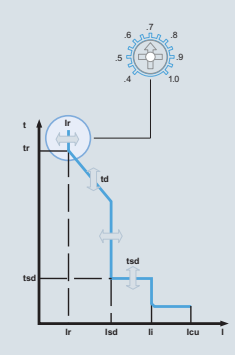

Circuit breakers	TS400			TS630			
Trip unit rating, In(A)	160	250	400	160	250	400	630
Setting value	Overload protection setting current Ir = Setting value (0.4~1) × In						
0.4	64	100	160	64	100	160	252
0.45	72	113	180	72	113	180	284
0.5	80	125	200	80	125	200	315
0.55	88	138	220	88	138	220	347
0.6	96	150	240	96	150	240	378
0.65	104	163	260	104	163	260	410
0.7	112	175	280	112	175	280	441
0.75	120	188	300	120	188	300	473
0.8	128	200	320	128	200	320	504
0.85	136	213	340	136	213	340	536
0.9	144	225	360	144	225	360	567
0.95	152	238	380	152	238	380	599
1	160	250	400	160	250	400	630

Long time tripping delay, td (sec)

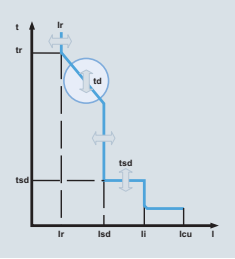

Tripping time (s)	Fixed at 6×Ir tolerance±20%

Electronic trip units (Standard)
ETS33 for TS400, TS630

Setting details

Short-circuit protection (short time)

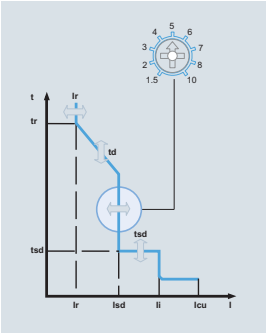

Circuit breakers		TS400			TS630			
Trip unit rating, In(A)		160	250	400	160	250	400	630
Setting value		Short time pick-up current setting, Isd = Setting value (1.5~10) × Ir						
0.4 96			150	240	96	150	240	378
0.45 108			169	270	108	169	270	425
0.5 120			188	300	120	188	300	473
0.55 132			206	330	132	206	330	520
0.6 144			225	360	144	225	360	567
0.65 156			244	390	156	244	390	614
0.7 1.5		168	263	420	168	263	420	662
0.75 180			281	450	180	281	450	709
0.8 192			300	480	192	300	480	756
0.85 204			319	510	204	319	510	803
0.9 216			338	540	216	338	540	851
0.95 228			356	570	228	356	570	898
1 240			375	600	240	375	600	945
0.4		128	200	320	128	200	320	504
0.45		144	225	360	144	225	360	567
0.5		160	250	400	160	250	400	630
0.55		176	275	440	176	275	440	693
0.6		192	300	480	192	300	480	756
0.65		208	325	520	208	325	520	819
0.7	2	224	350	560	224	350	560	882
0.75		240	375	600	240	375	600	945
0.8		256	400	640	256	400	640	1008
0.85		272	425	680	272	425	680	1071
0.9		288	450	720	288	450	720	1134
0.95		304	475	760	304	475	760	1197
1		320	500	800	320	500	800	1260
0.4		192	300	480	192	300	480	756
0.45		216	338	540	216	338	540	851
0.5		240	375	600	240	375	600	945
0.55		264	413	660	264	413	660	1040
0.6		288	450	720	288	450	720	1134
0.65		312	488	780	312	488	780	1229
0.7	3	336	525	840	336	525	840	1323
0.75		360	563	900	360	563	900	1418
0.8		384	600	960	384	600	960	1512
0.85		408	638	1020	408	638	1020	1607
0.9		432	675	1080	432	675	1080	1701
0.95		456	713	1140	456	713	1140	1795
1		480	750	1200	480	750	1200	1890

Electronic trip units (Standard)
ETS33 for TS400, TS630

Setting details

Short-circuit protection (short time)

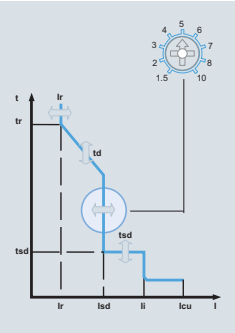

Circuit breakers		TS400			TS630			
Trip unit rating, In(A)		160	250	400	160	250	400	630
Setting value		Short time pick-up current setting, Isd = Setting value (1.5~10) × Ir						
0.4	4	256	400	640	256	400	640	1008
0.45	4	288	450	720	288	450	720	1134
0.5	4	320	500	800	320	500	800	1260
0.55	4	352	550	880	352	550	880	1386
0.6	4	384	600	960	384	600	960	1512
0.65	4	416	650	1040	416	650	1040	1638
0.7	4	448	700	1120	448	700	1120	1764
0.75	4	480	750	1200	480	750	1200	1890
0.8	4	512	800	1280	512	800	1280	2016
0.85	4	544	850	1360	544	850	1360	2142
0.9	4	576	900	1440	576	900	1440	2268
0.95	4	608	950	1520	608	950	1520	2394
1	4	640	1000	1600	640	1000	1600	2520
0.4	5	320	500	800	320	500	800	1260
0.45	5	360	563	900	360	563	900	1418
0.5	5	400	625	1000	400	625	1000	1575
0.55	5	440	687.5	1100	440	688	1100	1733
0.6	5	480	750	1200	480	750	1200	1890
0.65	5	520	813	1300	520	813	1300	2048
0.7	5	560	875	1400	560	875	1400	2205
0.75	5	600	938	1500	600	938	1500	2363
0.8	5	640	1000	1600	640	1000	1600	2520
0.85	5	680	1063	1700	680	1063	1700	2678
0.9	5	720	1125	1800	720	1125	1800	2835
0.95	5	760	1188	1900	760	1188	1900	2993
1	5	800	1250	2000	800	1250	2000	3150
0.4	6	384	600	960	384	600	960	1512
0.45	6	432	675	1080	432	675	1080	1701
0.5	6	480	750	1200	480	750	1200	1890
0.55	6	528	825	1320	528	825	1320	2079
0.6	6	576	900	1440	576	900	1440	2268
0.65	6	624	975	1560	624	975	1560	2457
0.7	6	672	1050	1680	672	1050	1680	2646
0.75	6	720	1125	1800	720	1125	1800	2835
0.8	6	768	1200	1920	768	1200	1920	3024
0.85	6	816	1275	2040	816	1275	2040	3213
0.9	6	864	1350	2160	864	1350	2160	3402
0.95	6	912	1425	2280	912	1425	2280	3591
1	6	960	1500	2400	960	1500	2400	3780

Electronic trip units (Standard)
ETS33 for TS400, TS630

Setting details

Short-circuit protection (short time)

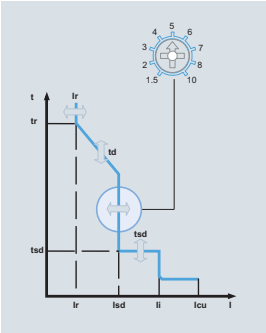

Circuit breakers	TS400			TS630			
Trip unit rating, In(A)	160	250	400	160	250	400	630
Setting value	Short time pick-up current setting, Isd = Setting value (1.5~10) × Ir						
0.4	448	700	1120	448	700	1120	1764
0.45	504	788	1260	504	788	1260	1984
0.5	560	875	1400	560	875	1400	2205
0.55	616	963	1540	616	963	1540	2425
0.6	672	1050	1680	672	1050	1680	2646
0.65	728	1138	1820	728	1138	1820	2867
0.7	784	1225	1960	784	1225	1960	3087
0.75	840	1313	2100	840	1313	2100	3308
0.8	896	1400	2240	896	1400	2240	3528
0.85	952	1488	2380	952	1488	2380	3749
0.9	1008	1575	2520	1008	1575	2520	3969
0.95	1064	1663	2660	1064	1663	2660	4190
1	1120	1750	2800	1120	1750	2800	4410
0.4	512	800	1280	512	800	1280	2016
0.45	576	900	1440	576	900	1440	2268
0.5	640	1000	1600	640	1000	1600	2520
0.55	704	1100	1760	704	1100	1760	2772
0.6	768	1200	1920	768	1200	1920	3024
0.65	832	1300	2080	832	1300	2080	3276
0.7	896	1400	2240	896	1400	2240	3528
0.75	960	1500	2400	960	1500	2400	3780
0.8	1024	1600	2560	1024	1600	2560	4032
0.85	1088	1700	2720	1088	1700	2720	4284
0.9	1152	1800	2880	1152	1800	2880	4536
0.95	1216	1900	3040	1216	1900	3040	4788
1	1280	2000	3200	1280	2000	3200	5040
0.4	640	1000	1600	640	1000	1600	2520
0.45	720	1125	1800	720	1125	1800	2835
0.5	800	1250	2000	800	1250	2000	3150
0.55	880	1375	2200	880	1375	2200	3465
0.6	960	1500	2400	960	1500	2400	3780
0.65	1040	1625	2600	1040	1625	2600	4095
0.7	1120	1750	2800	1120	1750	2800	4410
0.75	1200	1875	3000	1200	1875	3000	4725
0.8	1280	2000	3200	1280	2000	3200	5040
0.85	1360	2125	3400	1360	2125	3400	5355
0.9	1440	2250	3600	1440	2250	3600	5670
0.95	1520	2375	3800	1520	2375	3800	5985
1	1600	2500	4000	1600	2500	4000	6300

Electronic trip units (Standard)
ETS33 for TS400, TS630

Setting details

Short time tripping delay setting, tsd (ms)

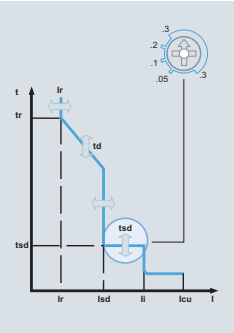

Time delay (tsd)	setting time (ms)	50	100	200	300	4 settings
	operation time (ms)	30<t≤70	70<t≤140	140<t≤240	240<t≤350	

Short circuit protection (Instantaneous), Ii (A)

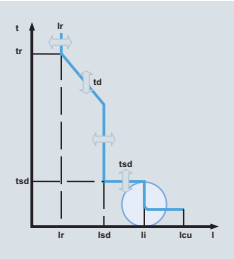

Tripping threshold (A), Ii	Fixed at 11×In

Electronic trip units (Standard)
ETS43 for MCCBs TS800

Configuration

Electronic type, ETS43 for MCCBs TS800

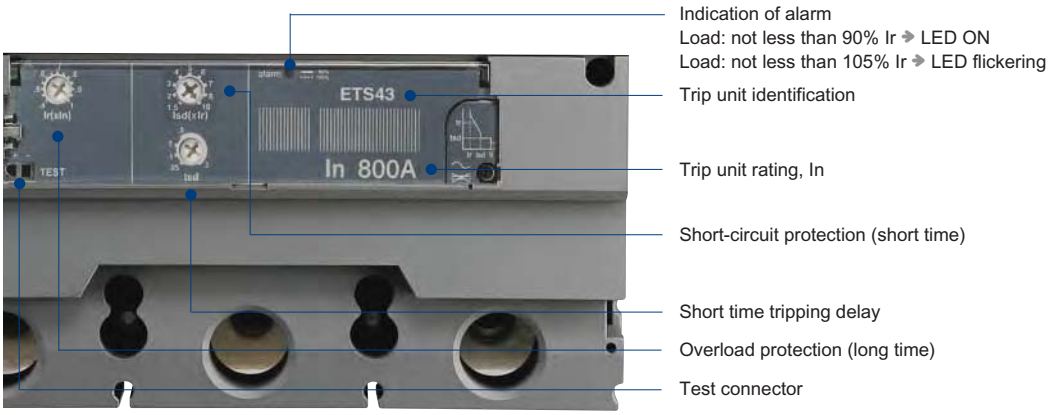

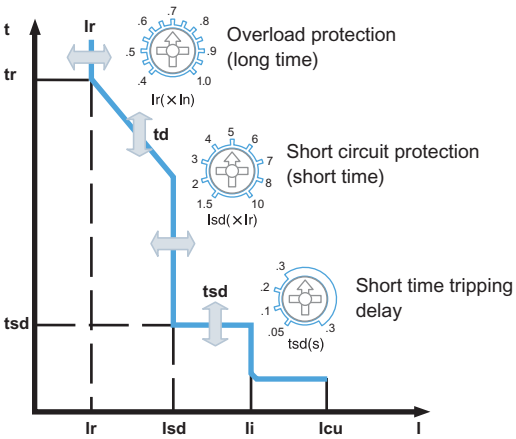

Overload protection (long time)	
Setting current (A), Ir	0.4, 0.45, 0.5, 0.55, 0.6, 0.65, 0.7, 0.75, 0.8, 0.85, 0.9, 0.95, 1.0×In 13 settings
Tripping time (s)	Fixed at 6×Ir , tolerance±20%

Short-circuit protection (short time)						
Tripping threshold (A), (Isd)	1.5, 2, 3, 4, 5, 6, 7, 8, 10×Ir 9 settings, tolerance ±15%					
Time delay (tsd)	setting time (ms)	50	100	200	300	4 settings
	operation time (ms)	30<t≤70	70<t≤140	140<t≤240	240<t≤350	

Short circuit protection (Instantaneous)	
Tripping threshold (A), Ii	Fixed at 11×In

Catalogue numbering system

ETS 43 In800A

Trip unit frame
- 23 for TS100, TS160, TS250
- 33 for TS400, TS630
- 43 for TS800

Rated current, In
- 630, 800A for TS800

Trip unit function
- ETS: Standard electronic trip unit

Electronic trip units (Standard)
ETS43 for MCCBs TS800

Current setting, Ir (A)

Standard electronic trip unit, ETS43

Trip unit	16	32	40	64	80	100	160	250	320	400	630	800
for TS800												

Setting details

Overload protection (long time)

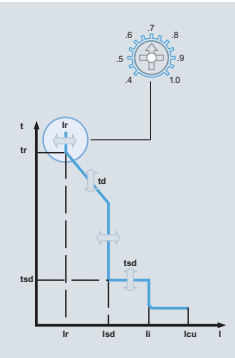

Circuit breakers	TS800	
Trip unit rating, In(A)	630	800
Setting value	Overload protection setting current Ir = Setting value (0.4~1) × In	
0.4	252	320
0.45	284	360
0.5	315	400
0.55	347	440
0.6	378	480
0.65	410	520
0.7	441	560
0.75	473	600
0.8	504	640
0.85	536	680
0.9	567	720
0.95	599	760
1	630	800

Long time tripping delay, td (sec)

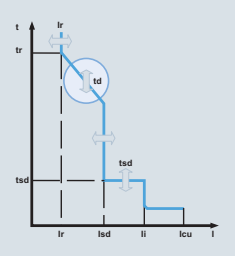

Tripping time (s)	Fixed at 6×Ir tolerance±20%

Electronic trip units (Standard)
ETS43 for MCCBs TS800

Setting details

Overload protection (long time)

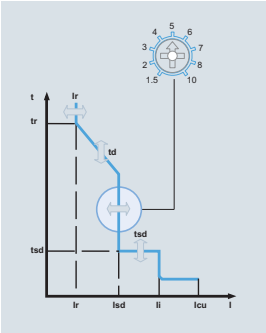

Circuit breakers		TS800	
Trip unit rating, In(A)		630	800
Setting value		Short time pick-up current setting, Isd = Setting value (1.5~10) × Ir	
0.4		378	480
0.45		425 540	
0.5 473			600
0.55 520			660
0.6 567			720
0.65 614			780
0.7 1.5		662	840
0.75 709			900
0.8 756			960
0.85 804			1020
0.9 850.5			1080
0.95 898			1140
1 945			1200
0.4		504	640
0.45		567	720
0.5		630	800
0.55		693	880
0.6		756	960
0.65		819	1040
0.7	2	882	1120
0.75		945	1200
0.8		1008	1280
0.85		1071	1360
0.9		1134	1440
0.95		1197	1520
1		1260	1600
0.4		756	960
0.45		851	1080
0.5		945	1200
0.55		1040	1320
0.6		1134	1440
0.65		1229	1560
0.7	3	1323	1680
0.75		1418	1800
0.8		1512	1920
0.85		1607	2040
0.9		1701	2160
0.95		1796	2280
1		1890	2400

Electronic trip units (Standard)
ETS43 for MCCBs TS800

Setting details

Overload protection (long time)

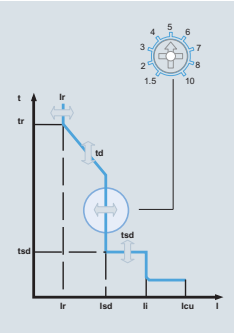

Circuit breakers		TS800	
Trip unit rating, In(A)		630	800
Setting value		Short time pick-up current setting, Isd = Setting value (1.5~10) × Ir	
0.4	4	1008	1280
0.45		1134	1440
0.5		1260	1600
0.55		1386	1760
0.6		1512	1920
0.65		1638	2080
0.7		1764	2240
0.75		1890	2400
0.8		2016	2560
0.85		2142	2720
0.9		2268	2880
0.95		2394	3040
1		2520	3200
0.4	5	1260	1600
0.45		1418	1800
0.5		1575	2000
0.55		1733	2200
0.6		1890	2400
0.65		2048	2600
0.7		2205	2800
0.75		2363	3000
0.8		2520	3200
0.85		2678	3400
0.9		2835	3600
0.95		2993	3800
1		3150	4000
0.4	6	1512	1920
0.45		1701	2160
0.5		1890	2400
0.55		2079	2640
0.6		2268	2880
0.65		2457	3120
0.7		2646	3360
0.75		2835	3600
0.8		3024	3840
0.85		3213	4080
0.9		3402	4320
0.95		3591	4560
1		3780	4800

Electronic trip units (Standard)
ETS43 for MCCBs TS800

Setting details

Short-circuit protection (short time)

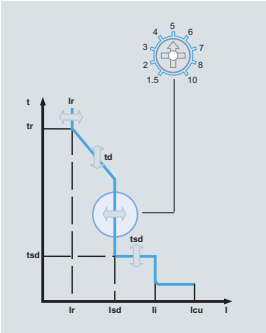

Circuit breakers		TS800	
Trip unit rating, In(A)		630	800
Setting value		Short time pick-up current setting, Isd = Setting value (1.5~10) × Ir	
0.4	7	1764	2240
0.45		1985	2520
0.5		2205	2800
0.55		2426	3080
0.6		2646	3360
0.65		2867	3640
0.7		3087	3920
0.75		3308	4200
0.8		3528	4480
0.85		3749	4760
0.9		3969	5040
0.95		4190	5320
1		4410	5600
0.4	8	2016	2560
0.45		2268	2880
0.5		2520	3200
0.55		2772	3520
0.6		3024	3840
0.65		3276	4160
0.7		3528	4480
0.75		3780	4800
0.8		4032	5120
0.85		4284	5440
0.9		4536	5760
0.95		4788	6080
1		5040	6400
0.4	10	2520	3200
0.45		2835	3600
0.5		3150	4000
0.55		3465	4400
0.6		3780	4800
0.65		4095	5200
0.7		4410	5600
0.75		4725	6000
0.8		5040	6400
0.85		5355	6800
0.9		5670	7200
0.95		5985	7600
1		6300	8000

Electronic trip units (Standard)
ETS43 for MCCBs TS800

Setting details

Short time tripping delay setting, tsd (ms)

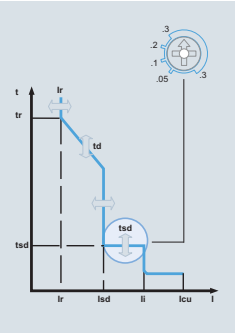

Time delay (tsd)	setting time (ms)	50	100	200	300	4 settings
	operation time (ms)	30<t≤70	70<t≤140	140<t≤240	240<t≤350	

Short circuit protection (Instantaneous), Ii (A)

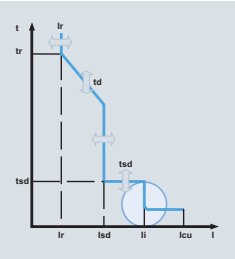

Tripping threshold (A), Ii	Fixed at 11×In

Electronic trip units (Multifunction) Overview

Types : ETM33, ETM43

Range of overload protection setting current (Ir): 64~630A (ETM33), 250~800A (ETM43)

Two frame size of circuit breakers: 630AF, 800AF

Trip units ETM33 and ETM43 can be mounted on circuit breakers of N, H and L type TS400 / TS630 / TS800

Only three(3) pole circuit breakers are available.

Ratings

Rated current, In(A)

Rated current In (A)	Trip unit		
	ETM33		ETM43
160	●	●	-
250	●	●	●
400	●	●	●
630	-	●	●
800	-	-	●
Circuit breakers	TS400 N/H/L	TS630 N/H/L	TS800 N/H/L

Current setting, Ir(A)

Trip unit		ETM33	ETM33	ETM43
Overload protection setting current, Ir(A)	64	●	●	-
	80	●	●	-
	100	●	●	-
	160	●	●	-
	250	●	●	●
	400	●	●	●
	630	-	●	●
	800	-	-	●
Applicable circuit breakers		TS400 N/H/L	TS630 N/H/L	TS800 N/H/L

Electronic trip units (Multifunction) Overview

Setting values

Overload protection (long time)	
Setting current (A), Ir	Adjustable 0.4 ~ 1.0×In, 30 settings
Tripping time (s) at 6×Ir	Adjustable 2, 4, 6, 8,12 5 settings, tolerance±20%

Short-circuit protection (short time)						
Tripping threshold (A), Isd	Adjustable 1.5, 2, 3, 4, 5, 6, 7, 8, 10×Ir, 9 settings, tolerance ±15%					
Time delay (tsd)	setting time (ms)	50	100	200	300	4 settings
	operation time (ms)	30<t≤70	70<t≤140	140<t≤240	240<t≤350	I^2t is off

Short-circuit protection (instantaneous)	
Tripping threshold (A), Ii	Adjustable 1.5, 2, 4, 5, 6, 8, 10, 11×In, 9 settings

Indication of tripping reason	
LED indication	Ir, Isd, Ii, (Ig)

Option for TS400ETM to TS800ETM						
Ammeter (A)	Maximum load phase current and R,S,T,N phase current					
Earth fault protection (E)	Adjustable tripping threshold (A), 0.2~1×In, 9 setting					
	setting time (ms)	100	200	300	400	4 settings
	operation time (ms)	60<t≤140	140<t≤230	230<t≤350	350<t≤500	I^2t is off
Communication (C)	Setting, R, S, T, N phase current, tripping reason					
ZSI (Z)	ZSI input and output signal					

Electronic trip units (Multifunction) Overview

① Adjustable rated current setting (Ir)
② Adjustable long time setting (tr)
③ Adjustable short time current setting (Isd)
④ Adjustable time delay setting (tsd)
⑤ Adjustable instantaneous current setting (Ii)
⑥ Adjustable earth fault current setting (Ig)
⑦ Adjustable earth fault delay setting (tg)
⑧ Indication LED
⑨ TR (trip reason) button
⑩ Display LCD (Ammeter)
⑪ Auxiliary power
⑫ Test connector
⑬ Alarm LED

ETM33 for TS400/TS630

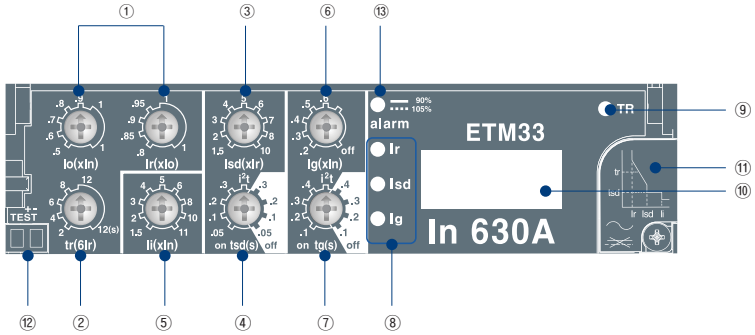

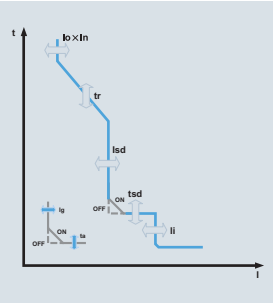

ETM43 for TS800

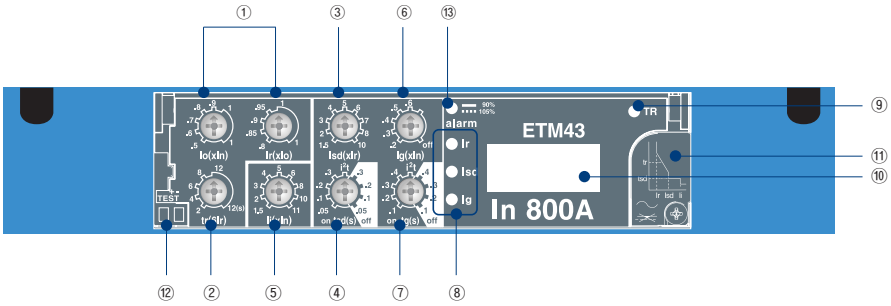

Electronic trip units (Multifunction)
ETM33 for TS400, TS630

Configuration

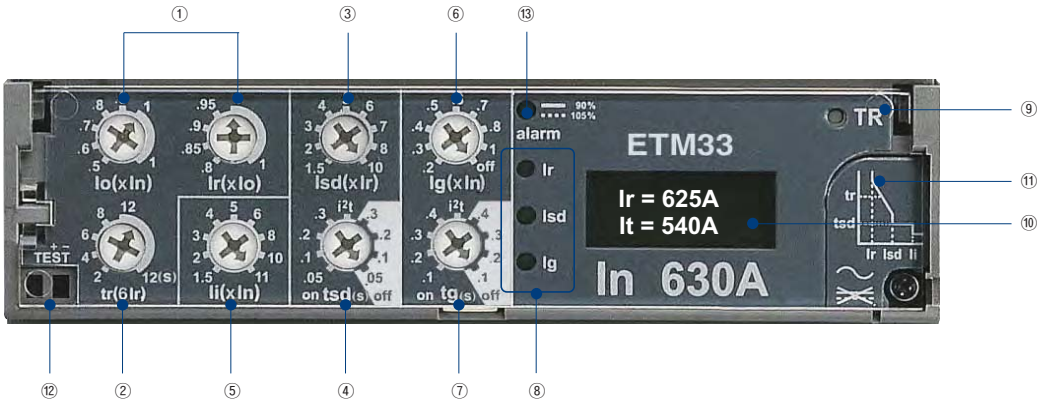

① Adjustable rated current setting (Ir)
② Adjustable long time setting (tr)
③ Adjustable short time current setting (Isd)
④ Adjustable time delay setting (tsd)
⑤ Adjustable instantaneous current setting (Ii)
⑥ Adjustable earth fault current setting (Ig)
⑦ Adjustable earth fault delay setting (tg)
⑧ Indication LED
⑨ TR (trip reason) button
⑩ Display LCD (Ammeter)
⑪ Battery
⑫ Test connector
⑬ Alarm LED 90% Ir : ON,
105% Ir or more: ON-OFF

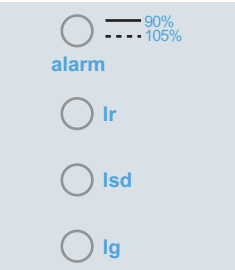

Alarm indication

The LED lights and remains lit when the load exceeds 90 % of Ir.
The LED blinks for an overload(≥105% Ir), warning that the circuit breaker may trip.

Fault indications

LEDs indicate the type of fault that caused tripping:
Ir : overload
Isd : short-circuit (short time, instantaneous)
Ig : earth fault
If push the TR button to indicate the tripping reason, the indication LED of tripping is ON.
The information is however stored in memory and the LED can be reilluminated by pressing the TR button.
The LED automatically goes off and the memory is cleared when the circuit breaker is reset.
In normal condition, if push TR button, all indication LED is ON for testing auxiliary power and LED.

Electronic trip units (Multifunction) ETM33 for TS400, TS630

Tripping characteristics

Trip unit, ETM33

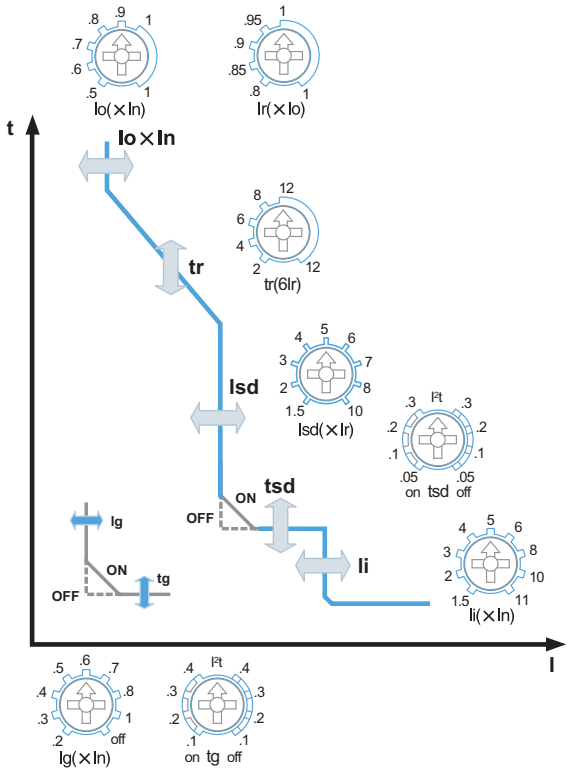

Long time protection against overloads

Io = Coarse adjustment (function of In)
Ir = Fine adjustment
tr = Long time delay

Short circuit protection

Isd = Short circuit threshold,
tsd = Short circuit time delay
I^2t curve in position ON or OFF

Instantaneous protection

Ii = Instantaneous threshold

Earth fault protection

Ig = Insulation fault threshold
tg = Earth fault time delay
I^2t curve in position ON or OFF

Catalogue numbering system

ETM 33 In600A

Trip unit frame
- 33 for TS400, TS630
- 43 for TS800

Rated current, In
- 160, 250, 400A for TS400
- 160, 250, 400, 630A for TS630

Trip unit function
- ETM : Multifunction electronic trip unit

Electronic trip units (Multifunction)
ETM33 for TS400, TS630

Setting details

Overload protection setting current, Ir(A)

Trip unit type		16	32	40	64	80	100	160	250	320	400	630	800
ETM33 for	TS400												
	for TS630												

Overload protection (long time)

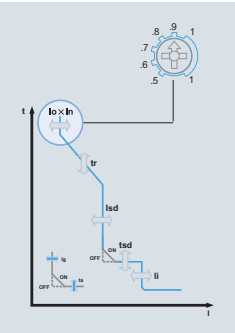

Type of trip unit		TS400ETM		
Rated current, In(A)		160	250	400
Setting value Coarse, Io	Setting value Fine, Ir	Short time pick-up current setting, Isd = Setting value (1.5~10) × Ir		
0.5	0.8	64	100	160
	0.85	68	106.25	170
	0.9	72	112.5	180
	0.95	76	118.75	190
	1	80	125	200
0.6	0.8	76.8	120	192
	0.85	81.6	127.5	204
	0.9	86.4	135	216
	0.95	91.2	142.5	228
	1	96	150	240
0.7	0.8	89.6	140	224
	0.85	95.2	148.75	238
	0.9	100.8	157.5	252
	0.95	106.4	166.25	266
	1	112	175	280
0.8	0.8	102.4	160	256
	0.85	108.8	170	272
	0.9	115.2	180	288
	0.95	121.6	190	304
	1	128	200	320
0.9	0.8	115.2	180	288
	0.85	122.4	191.25	306
	0.9	129.6	202.5	324
	0.95	136.8	213.75	342
	1	144	225	360
1	0.8	128	200	320
	0.85	136	212.5	340
	0.9	144	225	360
	0.95	152	237.5	380
	1	160	250	400

Electronic trip units (Multifunction)
ETM33 for TS400, TS630

Setting details

Overload protection (long time)

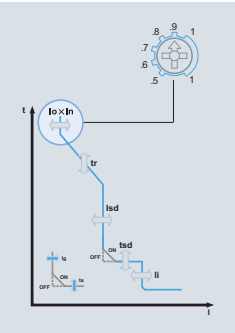

Type of trip unit		TS630ETM			
Rated current, In(A)		160	250	400	630
Setting value Coarse, Io	Setting value Fine, Ir	Overload protection setting current, Ir (A)			
0.5	0.8	64	100	160	252
	0.85	68	106.25	170	267.75
	0.9	72	112.5	180	283.5
	0.95	76	118.75	190	299.25
	1	80	125	200	315
0.6	0.8	76.8	120	192	302.4
	0.85	81.6	127.5	204	321.3
	0.9	86.4	135	216	340.2
	0.95	91.2	142.5	228	359.1
	1	96	150	240	378
0.7	0.8	89.6	140	224	352.8
	0.85	95.2	148.75	238	374.85
	0.9	100.8	157.5	252	396.9
	0.95	106.4	166.25	266	418.95
	1	112	175	280	441
0.8	0.8	102.4	160	256	403.2
	0.85	108.8	170	272	428.4
	0.9	115.2	180	288	453.6
	0.95	121.6	190	304	478.8
	1	128	200	320	504
0.9	0.8	115.2	180	288	453.6
	0.85	122.4	191.25	306	481.95
	0.9	129.6	202.5	324	510.3
	0.95	136.8	213.75	342	538.65
	1	144	225	360	567
1	0.8	128	200	320	504
	0.85	136	212.5	340	535.5
	0.9	144	225	360	567
	0.95	152	237.5	380	598.5
	1	160	250	400	630

Setting example :

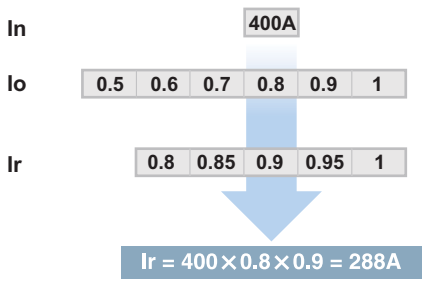

Electronic trip units (Multifunction) ETM33 for TS400, TS630

Short circuit protection

The short circuit threshold, Isd is a multiple of the overload setting, Ir.

Setting example :

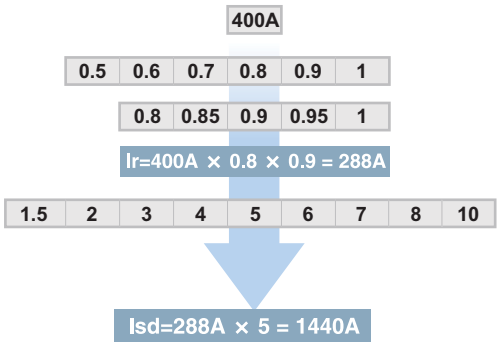

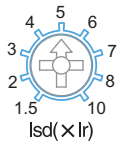

The breaker trips when the current exceeds 2880 A.

Short circuit time delay

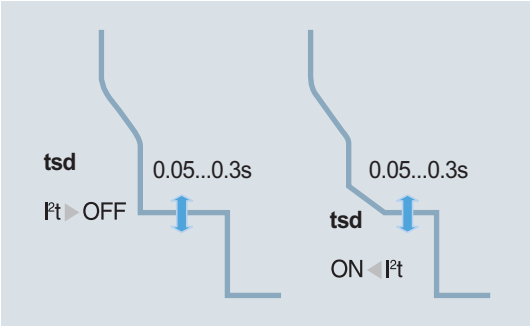

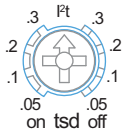

Earth fault protection(E), optional

The ETM trip units measure the vectorial sum of the three phase current and, if present, that of the neutral conductor.
If the sum of these values exceeds the set current thresholds for a period of time greater than the time delay, the breaker is tripped.

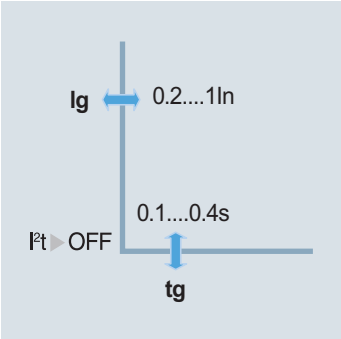

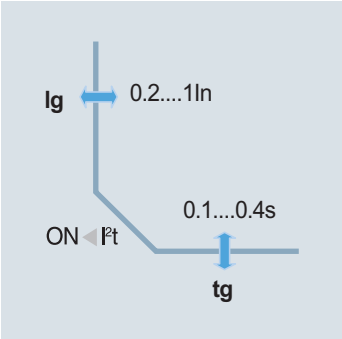

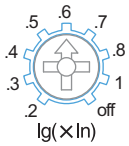

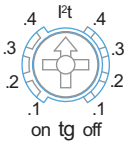

Ig = insulation fault threshold
tg = earth fault time delay

Electronic trip units (Multifunction) ETM33 for TS400, TS630

Ammeter (A), optional

The Ammeter device has an accuracy of ±10%.
The highest phase current is displayed in upper line.
In under line, R, S and T phase current is scrolled autom.

Ammeter display limits:

- minimum current ≥ 0.3×In (one phase)
- maximum current ≤ 10×In

Zone selective interlocking (ZSI), optional

Zone Selective Interlocking is mainly used in systems with high rated current and short circuit current values, with safety and service continuity requirements.
This type of discrimination can be achieved with circuit breakers equipped with specially designed electronic trip units (ETM for TS circuit breakers).

Zone selective interlocking (ZSI) is a system designed

- to reduce the stress on electrical distribution components during short-circuit or earth fault conditions.
- to reduce the tripping times (Lower than hundred milliseconds).
- to reduce the damage caused by the fault and of interferences to the power supply system;

A number of circuit breakers are interconnected one after another by a pilot-wire.

Power source: DC24V Power is required.

Operation

- With ZSI, ETM trip unit detects the fault and then send the signal to upstream circuit breaker which applies the set time delay and ignore its present short-time and or/ earth fault delay and clear the fault with no intentional delay.
- Without ZSI, ETM trip unit detects the fault and then trips the circuit breaker with intentional delay

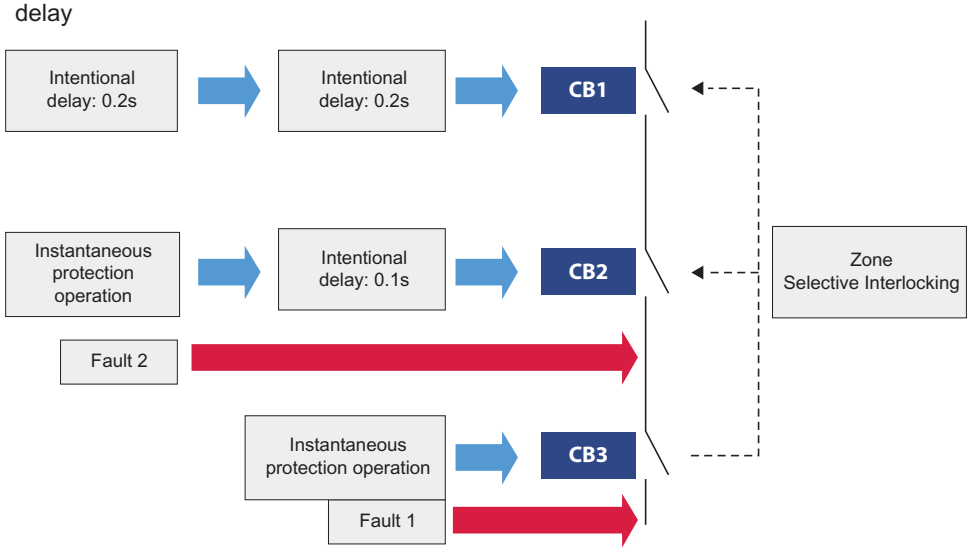

Electronic trip units (Multifunction)
ETM33 for TS400, TS630

Communication(C), optional

Communication interface: RS485 (Modbus-RTU)

The Modbus RS485 system is an open bus on which communicating Modbus devices are installed. All kinds of PLCs and computers can be connected to the bus.

Transmitted data :

- Protection setting values
- Highest current of the three phases
- Measurement: R, S, T and N phase current
- Fault reading: Type of fault (Overload, short-circuit, etc)

The setting of communication address using TR button and LCD display (Ammeter).

Power source: DC24V Power is required.

Combination of options

- ☐ A(Ammeter)
- ☐ E(Earth fault protection)
- ☐ A+E
- ☐ A +C(Communication)
- ☐ A+E+C
- ☐ Z(Zone selective interlocking)
- ☐ Z+A
- ☐ Z+E
- ☐ Z+A+E
- ☐ Z+A +C
- ☐ Z+A+E+C

Electronic trip units (Multifunction)
ETM33 for TS400, TS630

Menu structure of the electronic trip unit (ETM)

I	r	-	1	2	6	0	A
I	s	-			6	5	A

- Ir-1260A → Display current value (RMS) of phase which is carrying maximum in each phase
- Is-65A → Display current value (RMS) of each phase at an interval of every 2 seconds.

Electronic trip units (Multifunction)
ETM33 for TS400, TS630

Feature of trip unit according to option

ETM33 A+E
ETM33 A+E+C
ETM33 Z+A+E
ETM33 Z+A+E+C

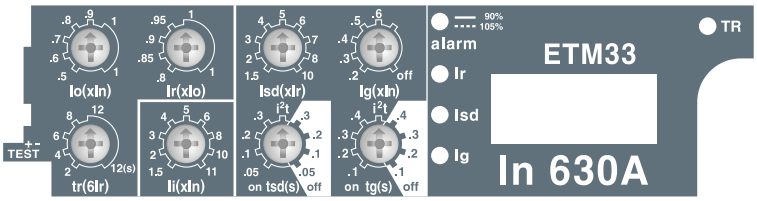

ETM33 A
ETM33 A+C
ETM33 Z+A
ETM33 Z+A+C

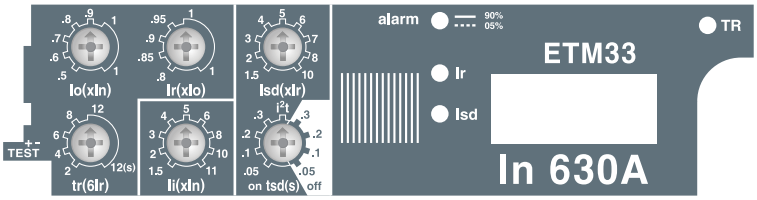

ETM33 E
ETM33 Z+E

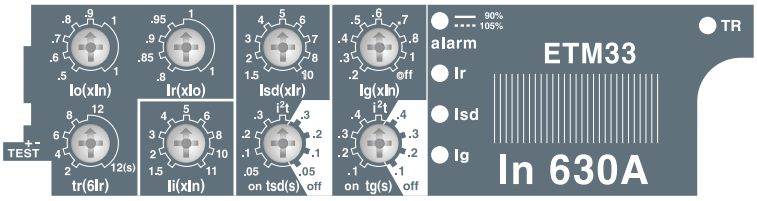

ETM33
ETM33 Z

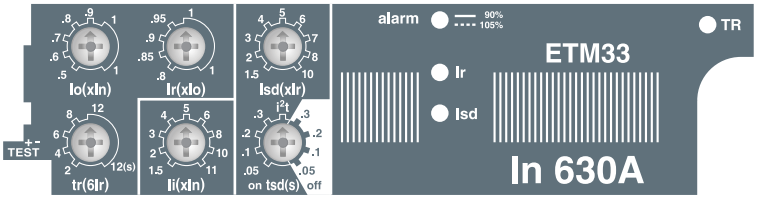

Electronic trip units (Multifunction)
ETM43 for TS800

Configuration

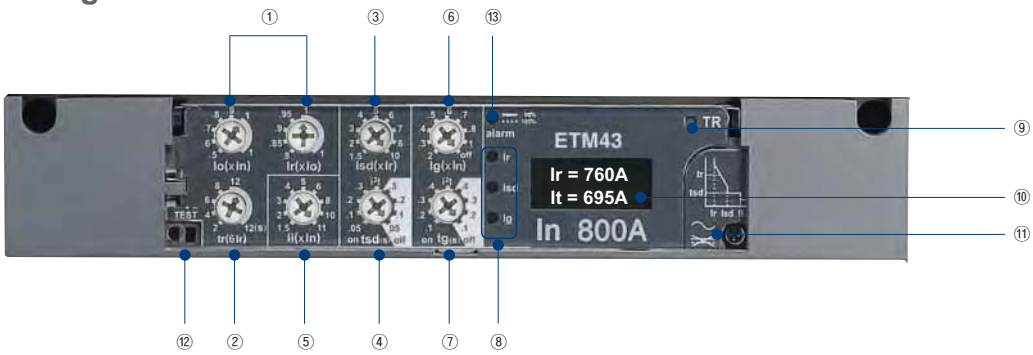

① Adjustable rated current setting (Ir)
② Adjustable long time setting (tr)
③ Adjustable short time current setting (Isd)
④ Adjustable time delay setting (tsd)
⑤ Adjustable instantaneous current setting (Ii)
⑥ Adjustable earth fault current setting (Ig)
⑦ Adjustable earth fault delay setting (tg)
⑧ Indication LED
⑨ TR (trip reason) button
⑩ Display LCD (Ammeter)
⑪ Battery
⑫ Test connector
⑬ Alarm LED 90% Ir : ON,
105% Ir or more: ON-OFF

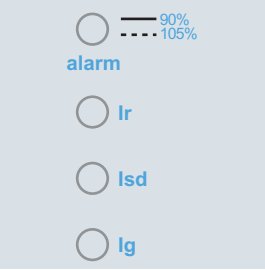

Alarm indication

The LED lights and remains lit when the load exceeds 90 % of Ir.
The LED blinks for an overload(≥105% Ir), warning that the circuit breaker may trip.

Fault indications

LEDs indicate the type of fault that caused tripping:
Ir : overload
Isd : short-circuit (short time, instantaneous)
Ig : earth fault
The information is however stored in memory and the LED can be reilluminated by pressing the TR button.
The LED automatically goes off and the memory is cleared when the circuit breaker is reset.
In normal condition, if push TR button, all indication LED is ON for testing auxiliary power and LED.

Electronic trip units (Multifunction) ETM43 for TS800

Tripping characteristics

Trip unit for TS800 circuit breaker

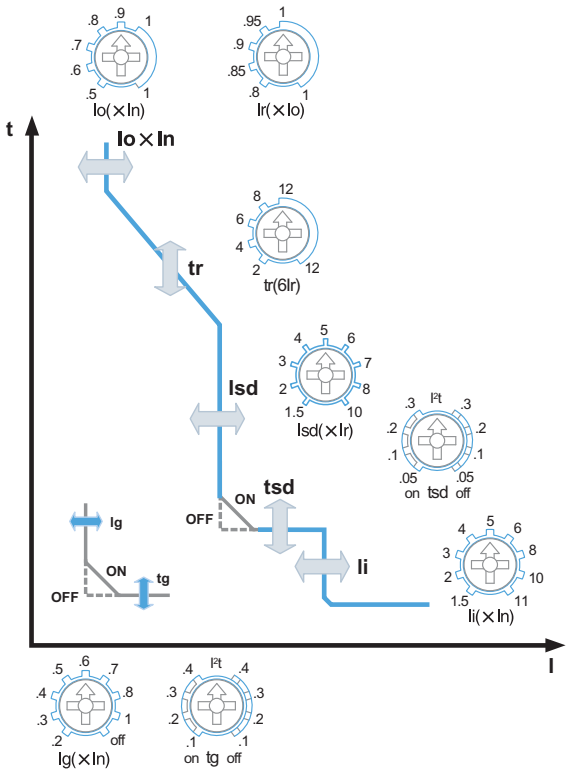

Long time protection against overloads

Io = Coarse adjustment (function of In)
Ir = Fine adjustment
tr = Long time delay

Short circuit protection

Isd = Short circuit threshold,
tsd = Short circuit time delay
I^2t curve in position ON or OFF

Instantaneous protection

Ii = Instantaneous threshold

Earth fault protection

Ig = Insulation fault threshold
tg = Earth fault time delay
I^2t curve in position ON or OFF

Catalogue numbering system

ETM 43 In800A

Trip unit frame
- 33 for TS400, TS630
- 43 for TS800

Rated current, In
- 630, 800A for TS630

Trip unit function
- ETM: Multi function electronic trip unit

Electronic trip units (Multifunction) ETM43 for TS800

Setting details

Trip unit rating, In

Trip unit type	16	32	40	64	80	100	160	250	320	400	630	800
ETM43 for TS800												

Overload protection (long time)

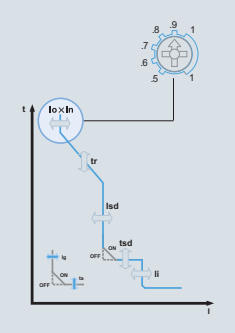

Type of trip unit		TS800ETM	
Rated current, In(A)		630	800
Setting value Coarse, Io	Setting value Fine, Ir	Overload protection setting current, Ir (A)	
0.5	0.8	252	320
	0.85	267.75	340
	0.9	283.5	360
	0.95	299.25	380
	1	315	400
0.6	0.8	302.4	384
	0.85	321.3	408
	0.9	340.2	432
	0.95	359.1	456
	1	378	480
0.7	0.8	352.8	448
	0.85	374.85	476
	0.9	396.9	504
	0.95	418.95	532
	1	441	560
0.8	0.8	403.2	512
	0.85	428.4	544
	0.9	453.6	576
	0.95	478.8	608
	1	504	640
0.9	0.8	453.6	576
	0.85	481.95	612
	0.9	510.3	648
	0.95	538.65	684
	1	567	720
1	0.8	504	640
	0.85	535.5	680
	0.9	567	720
	0.95	598.5	760
	1	630	800

Electronic trip units (Multifunction) ETM43 for TS800

Short circuit protection

The short circuit threshold, Isd is a multiple of the overload setting, Ir.

Setting example :

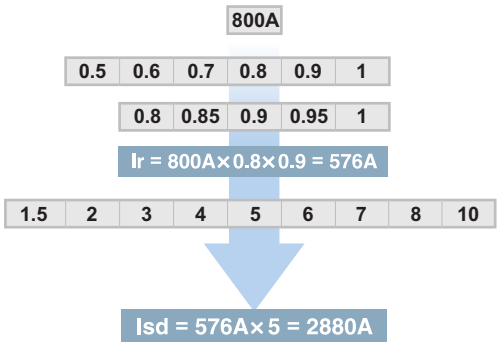

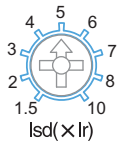

The breaker trips when the current exceeds 2880 A.

Short circuit time delay

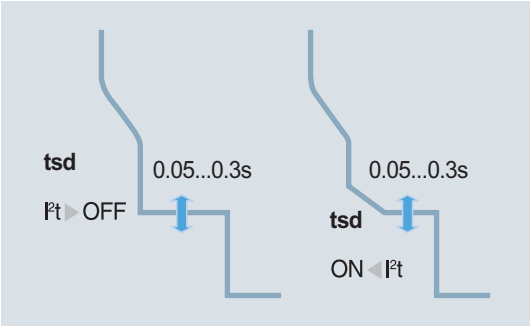

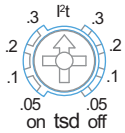

Earth fault protection(E), optional

The ETM trip units measure the vectorial sum of the three phase current and, if present, that of the neutral conductor.
If the sum of these values exceeds the set current thresholds for a period of time greater than the time delay, the breaker is tripped.

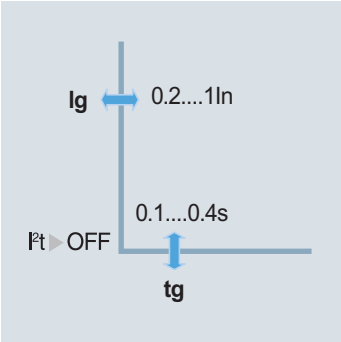

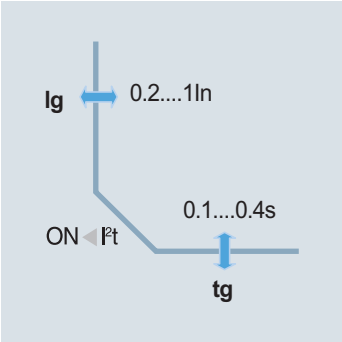

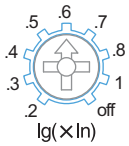

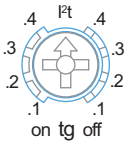

Ig = insulation fault threshold
tg = earth fault time delay

Electronic trip units (Multifunction) ETM43 for TS800

Ammeter (A), optional

The Ammeter device has an accuracy of ±10%.
The highest phase current is displayed in upper line.
In under line, R, S and T phase current is scrolled autom.

Ammeter display limits:

- minimum current ≥ 0.3×In (one phase)
- maximum current ≤ 10×In

Zone selective interlocking (ZSI), optional

Zone Selective Interlocking is mainly used in systems with high rated current and short circuit current values, with safety and service continuity requirements.
This type of discrimination can be achieved with circuit breakers equipped with specially designed electronic trip units (ETM for TS circuit breakers).

Zone selective interlocking (ZSI) is a system designed

- to reduce the stress on electrical distribution components during short-circuit or earth fault conditions.
- to reduce the tripping times (Lower than hundred milliseconds).
- to reduce the damage caused by the fault and of interferences to the power supply system;

A number of circuit breakers are interconnected one after another by a pilot-wire.

Power source: DC24V Power is required.

Operation

- With ZSI, ETM trip unit detects the fault and then send the signal to upstream circuit breaker which applies the set time delay and ignore its present short-time and or/ earth fault delay and clear the fault with no intentional delay.
- Without ZSI, ETM trip unit detects the fault and then trips the circuit breaker with intentional delay

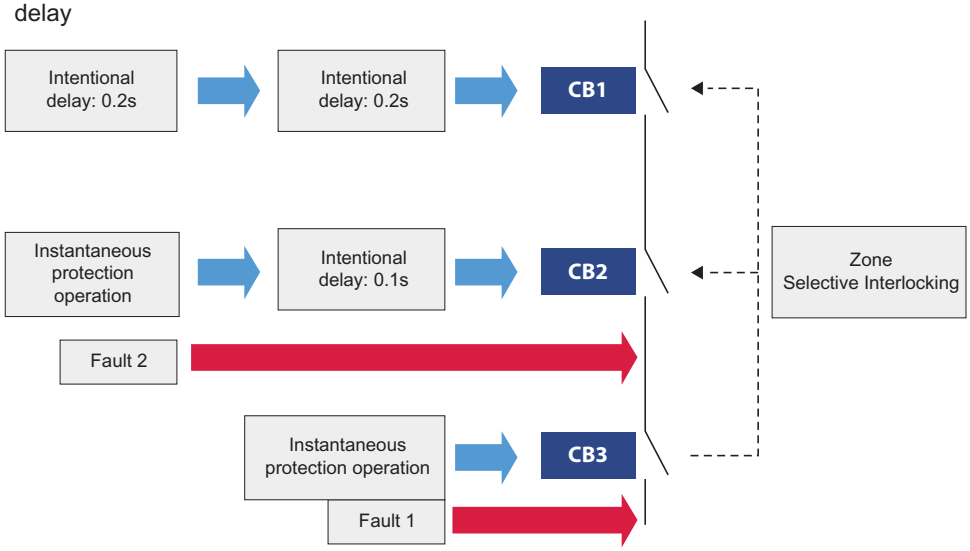

Electronic trip units (Multifunction) ETM43 for TS800

Communication(C), optional

Communication interface: RS485 (Modbus-RTU)

The Modbus RS485 system is an open bus on which communicating Modbus devices are installed. All kinds of PLCs and computers can be connected to the bus.

Transmitted data:

- Protection setting values
- Highest current of the three phases
- Measurement: R, S, T and N phase current
- Fault reading: Type of fault (Overload, short-circuit, etc)

The setting of communication address using TR button and LCD display (Ammeter).

Power source: DC24V Power is required.

Combination of options

- ☐ A(Ammeter)
- ☐ E(Earth fault protection)
- ☐ A+E
- ☐ A +C(Communication)
- ☐ A+E+C
- ☐ Z(Zone selective interlocking)
- ☐ Z+A
- ☐ Z+E
- ☐ Z+A+E
- ☐ Z+A +C
- ☐ Z+A+E+C

Electronic trip units (Multifunction)
ETM43 for TS800

Menu structure of the electronic trip unit (ETM)

I	r	-	1	2	6	0	A
I	s	-			6	5	A

- Ir-1260A → Display current value (RMS) of phase which is carrying maximum in each phase
- Is-65A → Display current value (RMS) of each phase at an interval of every 2 seconds.

Electronic trip units (Multifunction)
ETM43 for TS800

Feature of trip unit according to option

ETM43 A+E
ETM43 A+E+C
ETM43 Z+A+E
ETM43 Z+A+E+C

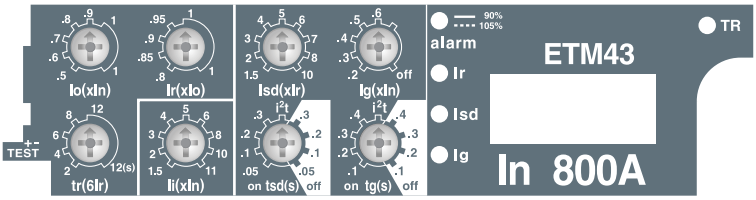

ETM43 A
ETM43 A+C
ETM43 Z+A
ETM43 Z+A+C

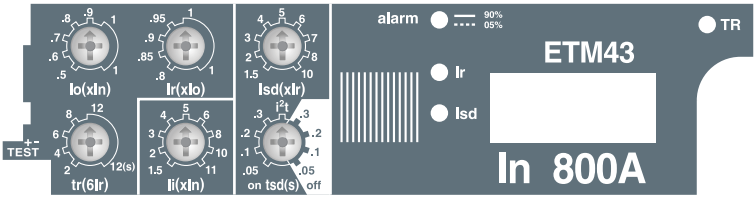

ETM43 E
ETM43 Z+E

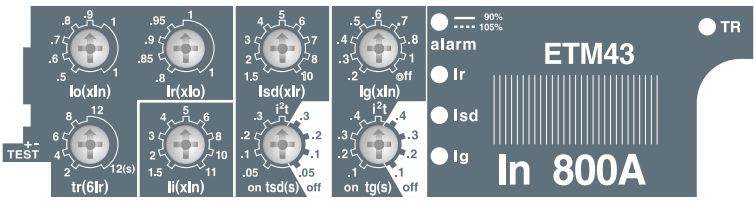

ETM43
ETM43 Z

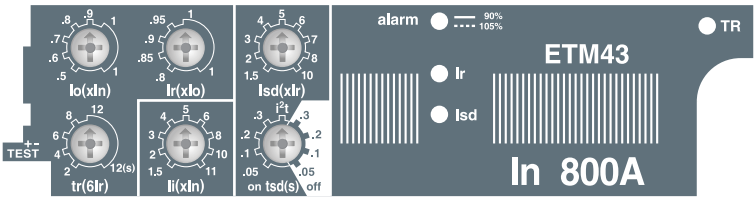

MCCBs for motor protection

Susol

Electrical characteristics

			TS100			TS160			TS250		
Frame size		[AF]	100 160						250		
Rated current, In		[A]	1.6, 3.2, 6.3, 12, 20, 32, 50, 63, 100			32, 50, 63, 100, 160			100, 160, 220		
No. of poles			3			3			3		
Rated operational voltage, Ue	AC	[V]	690			690			690		
	DC	[V]	500			500			500		
Rated impulse withstand voltage, Uimp		[kV]	8			8			8		
Rated insulation voltage, Ui		[V]	750 750						750		
Rated ultimate short-circuit breaking capacity, Icu			N	H	L	N	H	L	N	H	L
AC 50/60Hz	220/240V	[kA]	100	120	200 100		120	200	100	120	200
	380/415V	[kA]	50	85	150 50		85	150	50	85	150
	440/460V	[kA]	50 70		130	50	70	130	50	70	130
	480/500V	[kA]	42 65		85	42	65	85	42	65	85
	660/690V	[kA]	10	15 20		10 15		20	10	15	20
Rated service breaking capacity, Ics [%Icu]			100% 100%		100%	100%	100% 100%		100%	100%	100%
Rated short-circuit making capacity, Icm											
AC 50/60Hz	220/240V	[kA]	220	264 440		220 264		440	220	264	440
	380/415V	[kA]	105	187 330		105 187		330	105	187	330
	440/460V	[kA]	105	154 286		105 154		286	105	154	286
	480/500V	[kA]	88 143		187	88	143	187	88	143	187
	660/690V	[kA]	17	30 40		17 30		40	17	30	40
Category of utilization			A			A			A		
Isolation behavior			●			●			●		
Trip unit (release)											
●magnetic only		MTU	●			●			●		
Connection	fixed	front-connection	●			●			●		
		rear-connection	●			●			●		
	plug-in	front-connection	●			●			●		
		rear-connection	●			●			●		
Mechanical life		[operations]	25000			25000			25000		
Electrical life @415 V AC		[operations]	10000			10000			10000		
Basic dimensions, W×H×D (front connection)	3-pole [mm]		105×160×86			105×160×86			105×160×86		
Weight (front connection)	3-pole [kg]		2			2			2		
Reference standard			IEC60947-2			IEC60947-2			IEC60947-2		

※ Breaking capacity at 660/690V is for your reference. (not certified)

MCCBs for motor protection

Susol

TS400			TS630			TS800		
400			630			800		
320			500			630		
3			3			3		
690			690			690		
500			500			500		
8			8			8		
750			750			750		
N	H	L	N	H	L	N	H	L
100	120	200	100	120 200		100	120 200	
65	85 150		65	85	150	65	100	150
65	85 130		65	85	130	65	100	130
42	65 85		42	65	85	42	85	100
10	20 35		10	20	35	10	20	35
100%	100%	100%	100%	100% 100%		100%	100% 100%	
220	264	440	220	264 440		220	264 440	
143	187	330	143	187 330		143	220 330	
143	187	286	143	187 286		143	220 286	
88	143	187	88 143		187	88 187		220
17	40	74	17	40 74		17	40 74	
A			A			A		
●			●			●		
●			●			●		
●			●			●		
●			●			●		
●			●			●		
●			●			●		
20000			20000			10000		
6000			6000			3000		
140×260×110			140×260×110			210×320×135		
5.4			5.4			15.1		
IEC60947-2			IEC60947-2			IEC60947-2		

Magnetic only trip unit
MTU for TS100, TS160, TS250, TS400, TS630, TS800

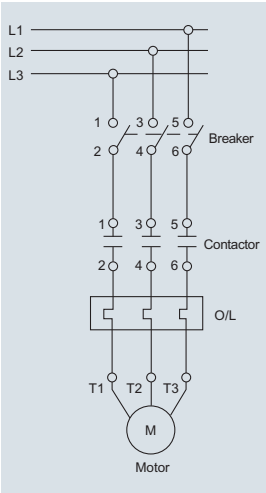

Magnetic only release

For the protection of motors from 1.6 to 250kW(400V), TS100 to TS800 circuit Breakers must be equipped with a special trip unit MTU adjustable thresholds.

This assembly ensures: Short-circuit protection (magnetic trip unit with adjustable thresholds); Suitability for isolation. For the TS100 to TS800 circuit breakers, trip unit MTU is interchangeable.

The circuit breakers presented here: Provide protection against short-circuits; Are suitable for isolation as defined by IEC60947-2 standard.

Configuration

Catalogue numbering system

TS250 **MTU**

Magnetic only release

MCCB frame type
- TS100: TS100N, TS100H, TS100L
- TS160: TS160N, TS160H, TS160L
- TS250: TS250N, TS250H, TS250L
- TS400: TS400N, TS400H, TS400L
- TS630: TS630N, TS630H, TS630L
- TS800: TS800N, TS800H, TS800L

Magnetic only trip unit
MTU for TS100, TS160, TS250, TS400, TS630, TS800

Characteristics

Magnetic trip units(MTU)

Rating(A)		In	TS100 to TS800													
			1.6	3.2	6.3	12	20	32	50	63	100	160	220	320	500	630
	N / H / L	TS100	●	●	●	●	●	●	●	●	●	-	-	-	-	-
		TS160	-	-	-	-	-	●	●	●	●	●	-	-	-	-
		TS250	-	-	-	-	-	-	-	-	●	●	●	-	-	-
		TS400	-	-	-	-	-	-	-	-	-	-	-	●	-	-
		TS630	-	-	-	-	-	-	-	-	-	-	-	-	●	-
		TS800	-	-	-	-	-	-	-	-	-	-	-	-	-	●

Short - circuit protection(magnetic)

Pick - up	Im	setting
		6..12×In (6 Point)

Setting details

MTU In	6×In	..	..	..	..	12×In
1.6	10	12	14	16	18	20
3.2	20	24	28	32	36	40
6.3	40	48	56	64	72	80
12	70	84	98	112	126	140
20	120	144	168	192	216	240
32	190	228	266	304	342	380
50	300	360	420	480	540	600
63	400	480	560	640	720	800

MTU In	6×In	..	..	..	..	12×In
100	600	720	840	960	1080	1200
160	960	1152	1344	1536	1728	1920
220	1320	1584	1848	2112	2376	2640
320	1920	2304	2688	3072	3456	3840
500	3000	3600	4200	4800	5400	6000
630	3780	4536	5292	6048	6804	7560

TS100 MTU
- Adjustable magnetic only unit

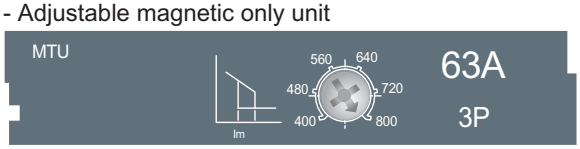

TS160 MTU
- Adjustable magnetic only unit

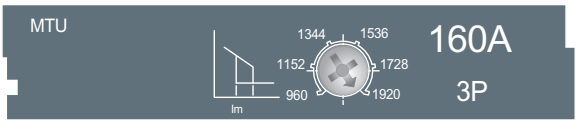

TS250 MTU
- Adjustable magnetic only unit

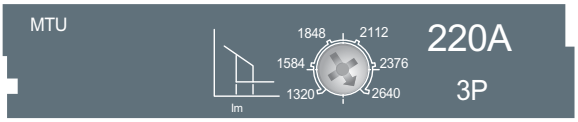

TS400 MTU, TS630 MTU, TS800 MTU
- Adjustable magnetic only unit

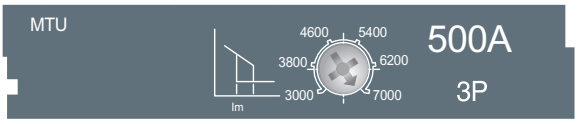

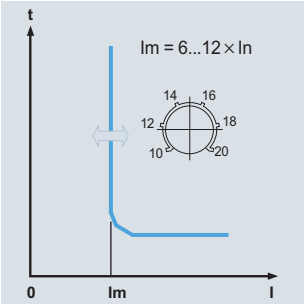

Switch-Disconnectors

Susol

			TD series			
			TD100NA	TD160NA	TS100NA	TS160NA
Frame size		[AF]	100	160	100 160	
Conventional thermal current, Ith		[A]	100	160	100 160	
No. of poles			2, 3, 4	2, 3, 4	2, 3, 4	2, 3, 4
Rated operational voltage,	AC	[V]	690 690		690	690
Ue DC		[V]	500 500		500	500
Rated operational current, Ie			100	160	100 160	
Rated impulse withstand voltage,Uimp		[kV]	8	8	8	8
Rated insulation voltage, Ui		[V]	750 750		750	750
Rated short-circuit making capacity, Icm		[kA peak]	3.1	3.1	2.8	3.6
Rated short-time	1s	[A rms]	2200	2200	2000	2500
withstand current, Icw	3s	[A rms]	2200	2200	2000	2500
	20s	[A rms]	960	960	690	960
Isolation behavior			●	●	●	●
Trip unit (release)						
●disconnector unit		DSU	●	●	●	●
Connection	fixed	front-connection	●	●	●	●
		rear-connection	●	●	●	●
	plug-in	front-connection	●	●	●	●
		rear-connection	●	●	●	●
Mechanical life		[operations]	25000 25000		25000	25000
Electrical life @415 V AC		[operations]	10000	10000 10000		10000
Basic dimensions, W×H×D	3-pole	[mm]	90×140×86 90	×140×86 105	×160×86 105	×160×86
(front connection)	4-pole	[mm]	120×140×86	120×140×86 140	×160×86 140	×160×86
Weight 3-pole		[kg]	1.5 1.5		2	2
(front connection)	4-pole	[kg]	1.8	1.8 2.6		2.6
Reference standard			IEC60947-3	IEC60947-3	IEC60947-3	IEC60947-3

The switch-disconnectors are different from the circuit-breakers in the absence of the conventional protection unit. They keep the overall dimensions, connection systems and accessories unchanged from the corresponding circuit-breakers. Installation standards require upstream protection. However, thanks to their high-set magnetic release, TD160 ... TS800 DSU are self protected.

Switch-Disconnectors

Susol

TS series

TS250NA	TS400NA	TS630NA	TS800NA
250 400		630	800
250 400		630	800
2, 3, 4	2, 3, 4	2, 3, 4	2, 3, 4
690 690		690	690
500 500		500	500
250 400		630	800
8	8	8	8
750 750		750	750
4.9	7.1	8.5	12
3500	5000	6300	8000
3500	5000	6300	8000
1350	1930	2320	2560
●	●	●	●
●	●	●	●
●	●	●	●
●	●	●	●
●	●	●	●
●	●	●	●
25000 20000		20000	10000
10000 6000		6000	3000
105×160×86 140	×260×110 140	×260×110 210	×320×135
140×160×86 186.5	×260×110 186.5	×260×110 280	×320×135
2	5.4 5.4		15.1
2.6 7.2		7.2	19.6
IEC60947-3	IEC60947-3	IEC60947-3	IEC60947-3

Trip unit identification

Susol MCCB for DC Application

Susol

- Susol MCCB is sutable for DC application such as Photovoltaic Circuit Breaker, UPS and datacenter
- DC short circuit test tested by VDE
- Higher nominal voltage range up to 1000 VDC
- Rated Current : 16A~800A
- No of Pole: 2/3/4Pole
- Available for AC/DC application

		TD100			TD160			TS100			TS160			TS250			TS400			TS630			TS800		
Frame size	(AF)	100			160			100			160			250			400			630			800		
Rated current, In (A)		16, 20, 25, 32, 40, 50, 63, 80, 100			100, 125, 160			40, 50, 63, 80, 100			100, 125, 160			125, 160 200, 250			300, 400			500, 630			700, 800		
No. of Poles	(Pole)	2, 3, 4			2, 3, 4			2, 3, 4			2, 3, 4			2, 3, 4			2, 3, 4			2, 3, 4			2, 3, 4		
Rating (DC)	1000V	4P			4P			4P			4P			4P			4P			4P			4P		
	750V	3P 3P						3P			3P			3P			3P			3P			3P		
	500V	2P			2P			2P			2P			2P			2P			2P			2P		
Rated service breaking (DC)	Type	N	H	L	N	H	L	N	H	L	N	H	L	N	H	L	N	H	L	N	H	L	N	H	L
	1000V (4P)	42	65	100	42	65	100	50	85	100	50	85	100	50	85	100	50	85	100	50	85	100	50	85	100
	750V (3P)	42	65	100	42	65	100	50	85	100	50	85	100	50	85	100	50	85	100	50	85	100	50	85	100
	500V (2P)	42	65	100	42	65	100	50	85	100	50	85	100	50	85	100	50	85	100	50	85	100	50	85	100
Trip unit																									
	FTU (fixed-thermal, fixed-magnetic)	●	●	●	●	●	●	●	●	●	●	●	●	●	●	●	●	●	●	●	●	●	●	●	●
	FMU (adjustable-thermal, fixed-magnetic)	●	●	●	●	●	●	●	●	●	●	●	●	●	●	●	●	●	●	●	●	●	●	●	●
	ATU (adjustable-thermal, adjustable-magnetic)	- -		-	-	-	-	- -		-	●	●	●	●	●	●	●	●	●	●	●	●	●	●	●

Exemplary circuit diagrams

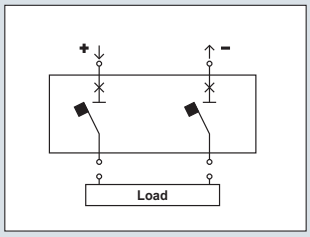

DC500V (2P)

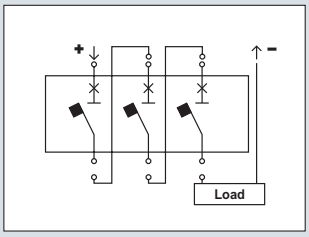

DC750V (3P)

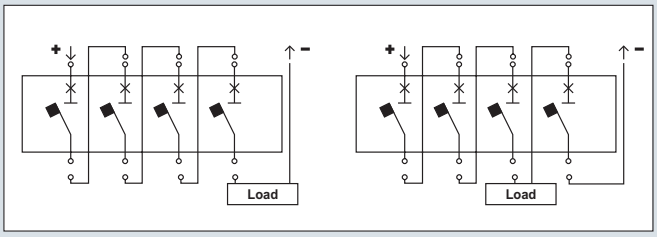

DC1000V (4P)

Susol MCCB PV up to 800A

Warnings when using Susol MCCB on PV system

The following warning must be kept when using Susol MCCB on PV system
If not, it can result damages on any related products or injuries.

Warning

1. Please, follow the wiring as shown below.
   When wired differently, usable voltage can be limited.

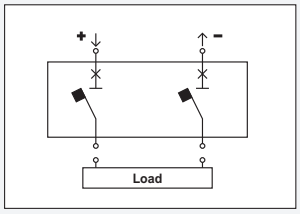

DC500V (2P)

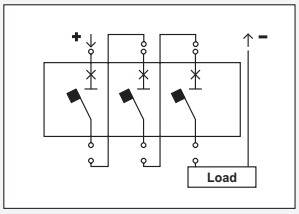

DC750V (3P)

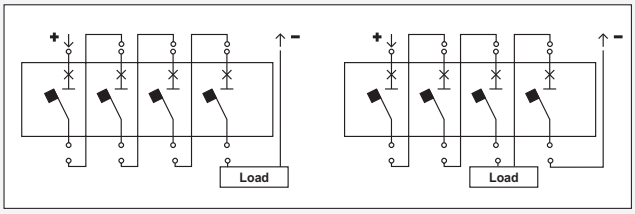

DC1000V (4P)

2. Use minimum of 60cm wire when wiring. Shot wires can result increasing temperature.

3. When designing circuit by using busbar as picture on right, de-rated use is recommended.
   It can cause temperature increase, wrongly trip, damage or fire due to shortage of heat release(Refer to De-rating table)

4. Please, maintain given thickness and length of busbar on the specification drawing.
   Additional de-rating is required in order to release the heat when busbar specification is different than instructed.

5. It is recommended to use tin or silver plated busbar.

6. Install sun screens or fans to maintain KS or IEC standard 40℃ inside of connection and low voltage panels.
   When inside temperature of panel exceeds 40℃, it can cause temperature increase, wrongly trip, damage or fire.
   Additional de-rating is required when panel temperature exceeds 40℃.

7. Please, ask any other further questions before applying.

Susol MCCB PV up to 800A

Short Busbar Installation

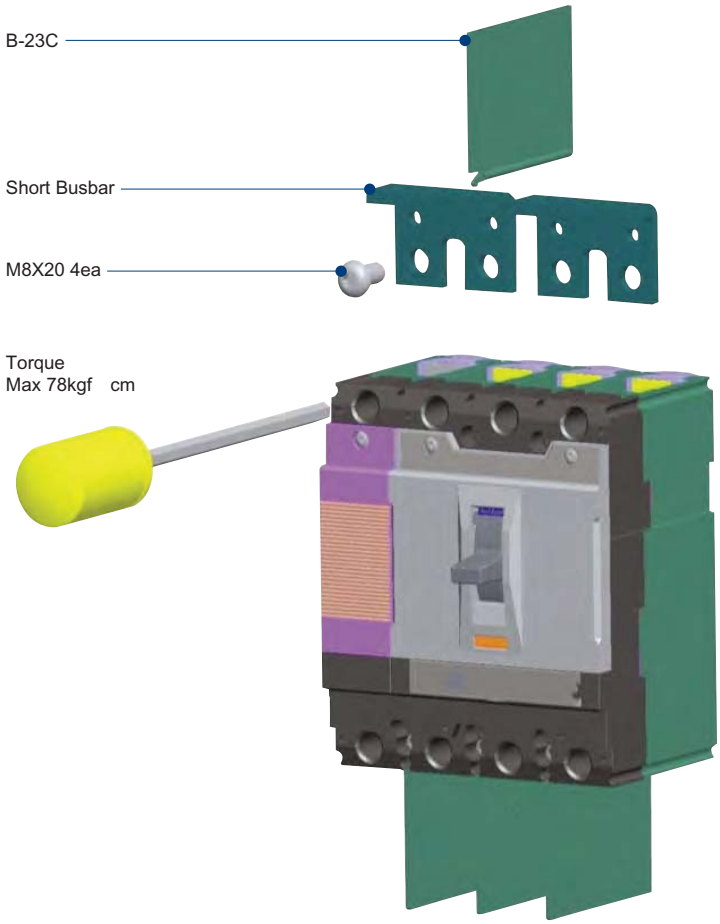

Configuration and Series Connection

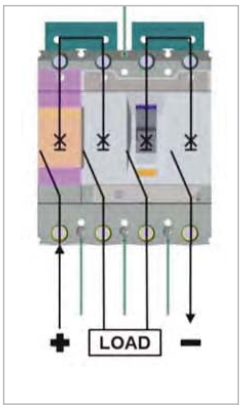

TD160

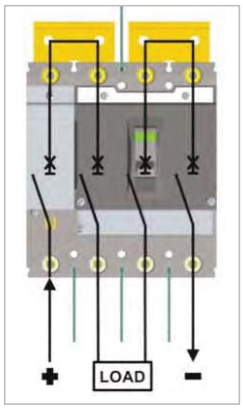

TS250

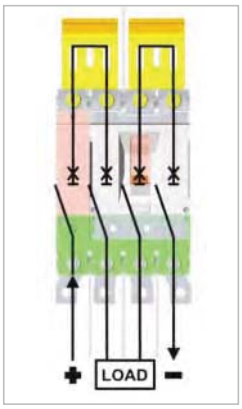

TS630

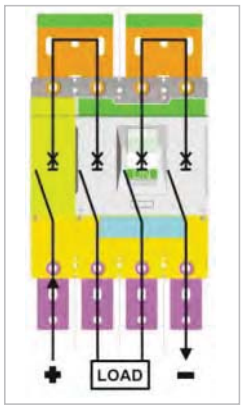

TS800

Susol MCCB PV up to 800A

Derating Table for AF

The following tables are based on the following assumptions;

- Maximum permissible temperature of busbars are 100
- T : Temperature around the circuit breaker and its connections

Note) 1. The values presented in the tables are the result of trials and theoretical calculations on the basis of the assumption mentioned above.
2. These tables are intended as an aid in designing connection, however, the actual values must be confirmed by tests on the installation.

AF	Rated current(A)	Derating(A)	Short Busbar
TD100	16	16	TD160 3t Short Busbar
	20	20	
	25	25	
	32	32	
	40	40	
	50	50	
	63	63	TD160 4t Short Busbar
	80	80	
	100	100	
TD160	100	100	
	125	125	
	160	135	TD160 5t Short Busbar
TS100	40	40	TS250 4t Short Busbar
	50	50	
	63	63	
	80	80	
	100	100	
TS160	100	100	
	125	125	
	160	135	
TS250	125	125	
	160	160	TS250 5t Short Busbar
	200	180	
	250	180	
TS400	300	300	TS630 Lower & Upper Short Busbar
	400	400	
TS630	500	500	
	630	500	
TS800	700 *	700	TS800 Lower & Upper Short Busbar
	800	700	

Note) 1. * Only available for TS800FTU
2. Dimension on the short busbar refer to A-6-47~52.
3. Short busbar for PV application is not provided by LSIS.

Susol MCCB PV up to 800A

Temperature Derating

Item	Rated current	Derating Current	Compensated rated current in accordance with ambient temperature (A)								Short Busbar
			10	20	30	40	45	50	60	70	
TD100	16	16	16	16	16	16	16	15	14	13	TD160 3t Short Busbar
	20	20	20	20	20	20	19	19	18	18	
	25	25	25	25	25	25	24	23	22	21	
	32	32	32	32	32	32	31	30	28	26	
	40	40	40	40	40	40	39	38	35	33	
	50	50	50	50	50	50	48	47	44	41	
	63	63	63	63	63	63	61	59	56	52	
	80	80	80	80	80	80	78	75	71	66	
	100	100	100	100	100	100	97	94	88	82	TD160 4t Short Busbar
TD160	100	100	100	100	100	100	97	94	88	82	
	125	125	125	125	125	125	121	117	110	103	
	160	135	135	135	135	135	130	125	117	108	TD160 5t Short Busbar
TS100	40	40	40	40	40	40	39	38	35	33	TS250 4t Short Busbar
	50	50	50	50	50	50	48	47	44	41	
	63	63	63	63	63	63	61	59	56	52	
	80	80	80	80	80	80	78	75	71	66	
	100	100	100	100	100	100	97	94	88	82	
TS160	100	100	100	100	100	100	97	94	88	82	
	125	125	125	125	125	125	121	117	110	103	
	160	160	160	160	160	160	155	150	141	131	
TS250	125	125	125	125	125	125	121	117	110	103	
	160	160	160	160	160	160	155	150	141	131	TS250 5t Short Busbar
	200	180	180	180	180	180	174	168	157	146	
	250	180	180	180	180	180	174	168	157	146	
TS400	300	300	300	300	300	300	291	281	264	246	TS630 Lower & Upper Short Busbar
	400	400	400	400	400	400	388	375	353	323	
TS630	500	500	500	500	500	500	484	468	439	408	
	630	500	500	500	500	500	484	468	439	408	
TS800	700 *	700	700	700	700	700	678	656	616	573	TS800 Lower & Upper Short Busbar
	800	700	700	700	700	700	678	656	616	573	

Note) * Only available for TS800FTU

4 pole MCCB with electronic trip unit

Susol

Products application & Function

- N-R-S-T and R-S-T-N Type for consideration of application field
- Full line up with 100~800AF
- 4P4D for N phase protection type
- Max. breaking capacity 150kA@415V
- KEMA type test and CE certification

Designation		TS100, TS160, TS250			TS400, TS630			TS800		
Type		N / H / L			N / H / L			N / H / L		
Rated current		40, 80, 160, 250A			160, 250, 400, 630A			630, 800A		
Poles		4 (N-R-S-T, R-S-T-N)			4 (N-R-S-T, R-S-T-N)			4 (N-R-S-T, R-S-T-N)		
Insulation voltage, Ui		AC750V			AC750V			AC750V		
Impulse withstand voltage, Uimp		8kV			8kV			8kV		
Short-circuit breaking capacity, Icu		N	H	L	N	H	L	N	H	L
AC 50/60Hz	220/240V	100	120	200	100	120	200	100	120	200
	380/415V	50	85	150	50	85	150	50	85	150
	440/460V	50	70	130	50	70	130	50	70	130
	480/500V	42	65	85	42	65	85	42	65	85
	660/690V	10	15	20	10	15	20	10	15	20
Ics		100% Icu			100% Icu			100% Icu		
Utilization category		A			A			A		
Reverse connection (Line/Load)		Available			Available			Available		
Tripping device		Electronics			Electronics			Electronics		
		ETS			ETS & ETM			ETS & ETM		
Thermal	Io, Ir	ETS: Ir = 0.4~1.0 In (13settings)			ETS: Ir = 0.4~1.0 In (13settings) ETM: Io = 0.5~1.0 In (6settings) Ir = 0.8~1.0 Io (5settings)			ETS: Ir = 0.4~1.0 In (13settings) ETM: Io = 0.5~1.0 In (6settings) Ir = 0.8~1.0 Io (5settings)		
	tr (6Ir)	ETS: 6sec at 6Ir (fixed)			ETS: 6sec at 6Ir (fixed) ETM: 12sec at 6Ir (5settings)			ETS: 6sec at 6Ir (fixed) ETM: 12sec at 6Ir (5settings)		
Instant.	Im	ETS: 1.5~10 Ir (9settings)			ETS, ETM: 1.5~10 Ir (9settings)			ETS,ETM: 1.5~10 Ir (9settings)		
	It 12	In			12 In			12 In		
Neutral protection	4P3d	No protection			No protection			No protection		
	4P3d+N/2	0.5 Ir			0.5 Ir			0.5 Ir		
	4P4d	1.0 Ir			1.0 Ir			1.0 Ir		
Cable	Min	10mm² or 8 AWG(40A)			70mm²(160A)			185mm² 2 / 350 kcmil 2(630A)		
	Max	120mm² or 250kcmil(250A)			185mm² 2 / 350 kcmil 2(630A)			240mm² 2(800A)		
Tighetning Torque		Hex.Socket bolt (M8): 6N.m			Hex.Socket bolt (M10): 10N.m			Hex. Socket bolt (M12): 14N.m		
MCCB (W H D)		140 160 86			186.5 260 110			280 320 135		

※ Breaking capacity at 660/690V is for your reference. (not certified)

MCCBs for power distribution up to 1600A

Susol

Electrical characteristics

				TS1000 TS1250					TS1600	
Type				TS1000 TS1250					TS1600	
Ampere frame				1000			1250		1600	
Pole				3, 4			3, 4		3, 4	
Rated current,(A)		In	-5~40°C	800, 1000			1250		1600	
			50°C 800,	1000			1250		1560	
			65°C 800,	1000			1240		1420	
Rated insulation voltage, (V)		Ui		1000			1000		1000	
Rated impulse withstand voltage, (kV)		Uimp		8			8		8	
Rated operational voltage, (V)		Ue	AC50/60Hz	690			690		690	
			DC	-			-		-	
Rated short-circuit breaking capacity				N	H	L	N	H	N	H
IEC60947-2	Rated ultimate short-circuit		220/240V	55	75	200	55	75	55	75
AC50/60Hz	breaking capacity, (kA) (Icu)		380/415V	50	70	150	50	70	50	70
(sym)			440/460V 50		65	130	50	65	50	65
			480/500V 40		50	100	40	50	40	50
			660/690V 35		45	-	35	45	35	45
		DC 250V	2P	-	-	-	-	-	-	-
			500V 2P	-	-	-	-	-	-	-
			750V 3P	-	-	-	-	-	-	-
	Rated service breaking capacity (Ics)	%Icu		100%	75%	100%	100%	75%	100%	75%
	Rated short-circuit making capacity (kA) (Icw)	AC50/60Hz	1s	25		12	25		25	
			3s	-			-		-	
Overriding instantaneous protection			kA peak	50		30	50		50	
Isolation				○			○		○	
Category B						A	B		B	
	Mechanical life (operations)			10000		4000	10000		10000	
(Life cycle)	Electrical life	440V	In/2	6000		4000	5000		5000	
	(operations)		In 5000			3000	4000		2000	
		690V	In/2 4000			3000	3000		2000	
			In 2000			2000	2000		1000	
Pollution degree				3			3		3	
Dimension (mm)			3-pole	327×210×152.5						
(H×W×D) 4-pole				327×280×152.5						
Weight (kg)			3-pole	13						
			4-pole 16.8							

MCCBs for power distribution up to 1600A

Susol

Overview

Classification	N type	A type	P type	S type
Externals				
Current protection	• L / S / I / G / Thermal	• L / S / I / G / Thermal • ZSI(Protective coordination)	• L / S / I / G / Thermal(Continuous) • ZSI(Protective coordination)	• P type
Other protection	-	• Earth leakage (Option)	• Earth leakage(Option) • Over/Under current • Over/Under frequency • Unbalance(Voltage/Current) • Reverse power	• P type
Measurement function	-	• Current (R / S / T / N)	• 3 Phase Voltage/Current RMS/Vector • Power(P, Q, S), PF(3-Phase) • Energy(Positive/Negative) • Frequency, Demand	• 3 Phase Voltage/Current RMS/Vector • Power(P, Q, S), PF(3-Phase) • Energy(Positive/Negative) • Frequency, Demand • Voltage/Current harmonics (1st~63th) • 3 Phase Waveforms • THD, TDD, K-Factor
Fine adjustment	-	-	• Fine adjustment for long/short time delay/instantaneous/ ground	• P type
Pre Trip Alarm	-		• Overload protection relays : DO (Alarm) (Ground fault is not available when using Pre trip alarm)	• P type
Digital Output	-	• 3DO (Fixed) • L, S/I, G Alarm	• 3DO (Programmable) • Trip, Alarm, General	• P type
IDMTL setting	-	-	• Compliance with IEC60255-3 SIT, VIT, EIT, DT	• P type
Communication	-	• Modbus/RS−485 • Profibus−DP	• Modbus / RS-485 • Profibus-DP	• Modbus / RS-485 • Profibus-DP
Power supply	• Self Power -Power source works over 25% of current of In (one pole)	• Self Power - Power source works over 25% of current of In (one pole) - External power source are required for comm. • AC/DC 100~250V • DC 24~60V	• AC/DC 100~250V • DC 24~60V Basic protection function(L / S / I / G) is still under normal operation without control power.	• AC/DC 100~250V • DC 24~60V
RTC timer	• Available	• Available	• Available	• Available
LED for trip info.	• Long time delay • Short time delay/Instantaneous • Ground fault	• N type	• N type	• N type
Fault recording	-	• 10 records (Fault/Current/Date and Time)	• 256 records (Fault/Current/Date and Time)	• 256 records • Last fault wave recording (3 Phase)
Event recording		-	• 256 records(Content, Status, Date)	• P type
Operating button	• Reset button -	• Reset, Menu Up/Down, Left/Right, Enter	• A type	• A type

N type: 「Normal」 type

- Optimized protection function
- OCR, OCGR function according IEC60947-2
- Overload protection
  - -Long-time delay
  - -Thermal
- Short-circuit protection
  - -Short-time delay / Instantaneous
  - -I^2t On/Off optional (for short-time delay)
- Ground fault protection
  - -I^2t On/Off optional
- Self-Power

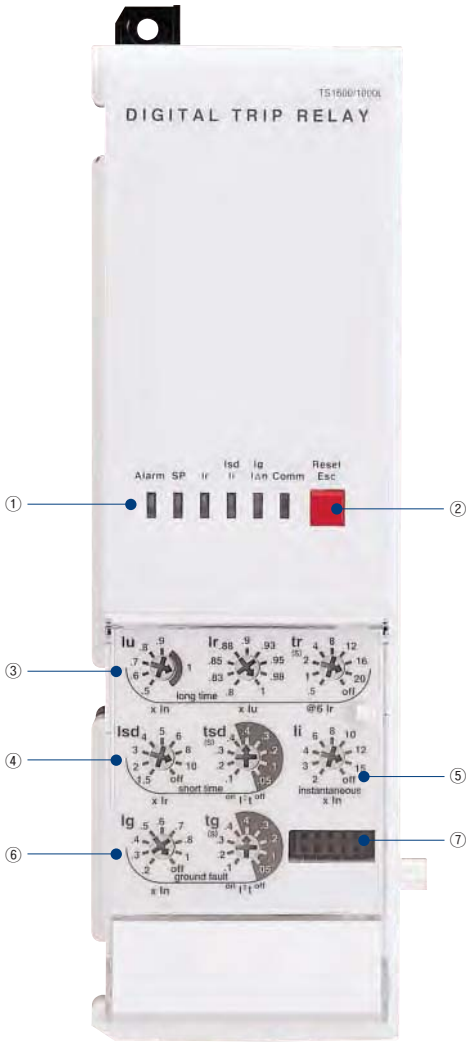

① **LED: Indication of trip info. and overload state**

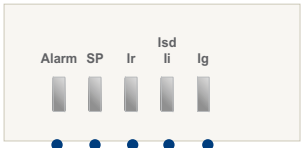

Ig: LED indicating ground-fault
Isd/Ii: LED indicating short-time or instantaneous tripping
Ir: LED indicating long-time delay
SP: Self-protection and battery test LED
Alarm: LED indicating an overload
(Turn on above 90%, Blink above 105%)

② **Reset Key: Fault reset or battery check**

③ **Iu, Ir: Long-time current setting, tr: Long-time tripping delay setting**

④ **Isd: Short-time current setting, tsd: Short-time tripping delay setting**

⑤ **Ii: Instantaneous current setting**

⑥ **Ig: Ground fault current setting, tg: Ground fault tripping delay setting**

⑦ **Test terminal: OCR test terminal (Connected with OCR tester)**

MCCBs for power distribution up to 1600A

Susol

Protection

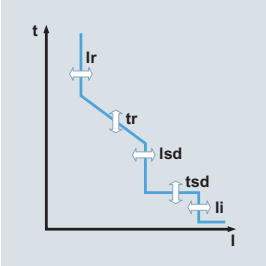

Long time											
Current setting (A)	Iu = In×...		0.5	0.6	0.7	0.8	0.9	1.0			
	Ir = Iu×...		0.8	0.83	0.85	0.88	0.9	0.93	0.95	0.98	1.0
Time delay (s)	tr@(1.5×Ir)		12.5	25	50	100	200	300	400	500	Off
Accuracy: ±15% or below	tr@(6.0×Ir)		0.5	1	2	4	8	12	16	20	Off
100ms	tr@(7.2×Ir)		0.34	0.69	1.38	2.7	5.5	8.3	11	13.8	Off
Short time											
Current setting (A) Accuracy: ±10%	Isd = Ir×...		1.5	2	3	4	5	6	8	10	Off
Time delay (s) @ 10×Ir	tsd	I^2t Off	0.05	0.1	0.2	0.3	0.4				
		I^2t On		0.1	0.2	0.3	0.4				
	(I^2t Off)	Min. Trip Time(ms)	20	80	160	260	360				
		Max. Trip Time(ms)	80	140	240	340	440				
Instantaneous											
Current setting (A)	Ii = In×...		2	3	4	6	8	10	12	15	Off
Tripping time			50(±10ms)								

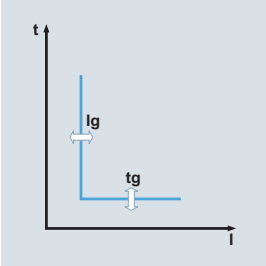

Ground fault											
Pick-up (A) Accuracy: ±10%(Ig>0.4In) ±20%(Ig≤0.4In)	Ig = In×...		0.2	0.3	0.4	0.5	0.6	0.7	0.8	1.0	Off
Time delay (s) @ 1×In	tg	I^2t Off	0.05	0.1	0.2	0.3	0.4				
		I^2t On		0.1	0.2	0.3	0.4				
	(I^2t Off)	Min. Trip Time(ms)	20	80	160	260	360				
		Max. Trip Time(ms)	80	140	240	340	440				

NV type (For ship only)

Protection

Long time											
Current setting (A)	Ir = In×...		0.8	0.9	1.0	1.05	1.1	1.15	1.2	1.25	Off
Time delay (s)	tr@(1.2×Ir) 10			15	20	25	30	40	50	60	100
Accuracy: ±15% or below	tr@(3×Ir) 0.99			1.49	1.99	2.48	2.98	3.97	4.97	5.96	9.93
100ms	tr@(6×Ir) 0.24			0.36	0.48	0.59	0.71	0.95	1.19	1.43	2.38
Short time											
Current setting (A) Accuracy: ±10%	Isd = In×...		2	2.5	2.7	3	3.5	4	4.5	5	Off
Time delay (s) @ 10×Ir	tsd	I^2t Off	0.05	0.1	0.2	0.3	0.4				
		I^2t On		0.1	0.2	0.3	0.4				
	(I^2t Off)	Min. Trip Time(ms)	20	80	160	260	360				
		Max. Trip Time(ms)	80	140	240	340	440				
Instantaneous											
Current setting (A)	Ii = In×...		2	4	6	8	10	12	14	16	Off
Tripping time			50(±10ms)								

■ The fine-adjustable setting of the rated current[In]

- In = Ict×[0.4~1.0]
- Setting range: 40~100% of Ict (unit: 0.5%)

A type: 「Ammeter」 type

- Overload protection
  - -Long-time delay
  - -Thermal
- Short-circuit protection
  - -Short-time delay / Instantaneous
  - -I^2t On/Off optional (for short-time delay)
- Ground fault protection
  - -I^2t On/Off optional
- Realization of protective coordination by ZSI (Zone Selective Interlocking)
- High-performance and high-speed MCU built-in
  - -Accurate measurement with tolerance of 1.0%
- Fault recording
  - -Records Max. up to 10 fault information about fault type, fault phase, fault data, occurrence time of fault
- SBO (Select Before Operation)
  - -High reliability for control and setting change method
- 3 DO(Digital Output)
  - -Fixed
- Communication
  - -Modbus/RS485
  - -Profibus-DP

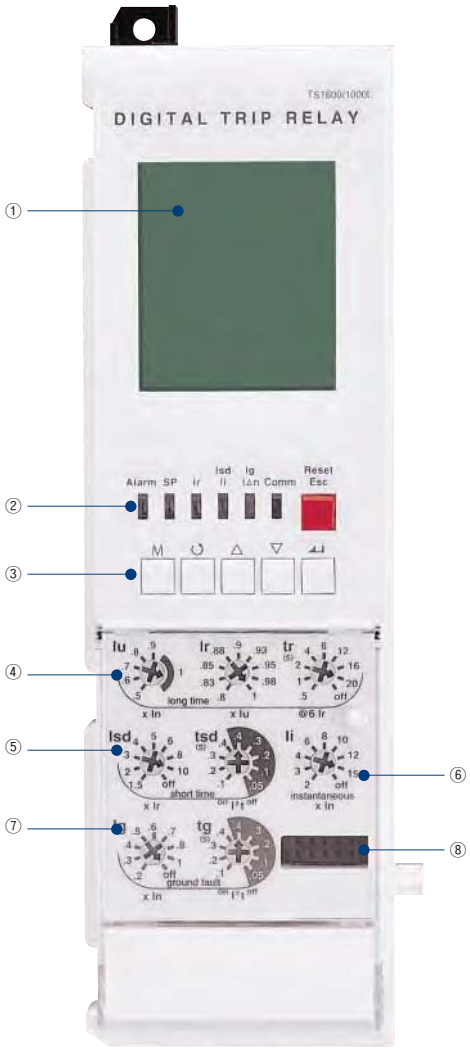

① **LCD: Indication of measurement and information**

② **LED: Indication of trip info. and overload state**

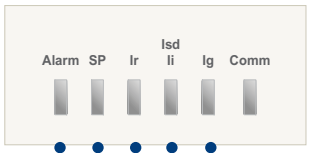

- Ig: LED indicating ground-fault
- Isd/Ii: LED indicating short-time or instantaneous tripping
- Ir: LED indicating long-time delay
- SP: Self-protection and battery test LED
- Alarm: LED indicating an overload (Turn on above 90%, Blink above 105%)

③ **Key: Move to menu or reset**

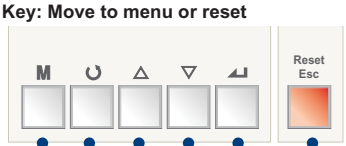

- Reset/ESC: Fault reset or ESC from menu
- Enter: Enter into secondary menu or setting input
- Up/Down: Move the cursor up/down on screen or increase/decrease a setting value
- Right/Left: Move the cursor or setting right/left on screen (Rotation)
- Menu: Menu display ↔ Measurement display

④ **Iu, Ir: Long-time current setting, tr: Long-time tripping delay setting**

⑤ **Isd: Short-time current setting, tsd: Short-time tripping delay setting**

⑥ **Ii: Instantaneous current setting**

⑦ **Ig: Ground fault current setting, tg: Ground fault tripping delay setting**

⑧ **Test terminal: OCR test terminal (Connected with OCR tester)**

Protection

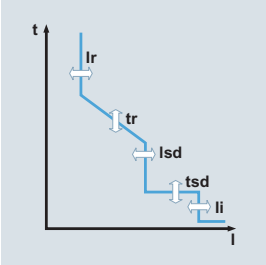

Long time											
Current setting (A)	Iu = In×...		0.5	0.6	0.7	0.8	0.9	1.0			
	Ir = Iu×...		0.8	0.83	0.85	0.88	0.9	0.93	0.95	0.98	1.0
Time delay (s)	tr@(1.5×Ir)		12.5	25	50	100	200	300	400	500	Off
Accuracy: ±15% or below	tr@(6.0×Ir)		0.5	1	2	4	8	12	16	20	Off
100ms	tr@(7.2×Ir)		0.34	0.69	1.38	2.7	5.5	8.3	11	13.8	Off
Short time											
Current setting (A) Accuracy: ±10%	Isd = Ir×...		1.5	2	3	4	5	6	8	10	Off
Time delay (s) @ 10×Ir	tsd	I^2t Off	0.05	0.1	0.2	0.3	0.4				
		I^2t On		0.1	0.2	0.3	0.4				
	(I^2t Off)	Min. Trip Time(ms)	20	80	160	260	360				
		Max. Trip Time(ms)	80	140	240	340	440				
Instantaneous											
Current setting (A)	Ii = In×...		2	3	4	6	8	10	12	15	Off
Tripping time			50(±10ms)								

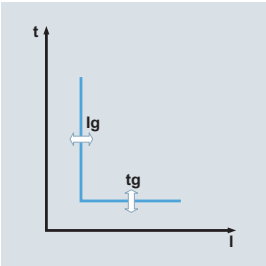

Ground fault											
Pick−up (A) Accuracy: ±10%(Ig>0.4In) ±20%(Ig≤0.4In)	Ig = In×...		0.2	0.3	0.4	0.5	0.6	0.7	0.8	1.0	Off
Time delay (s) @ 1×In	tg	I^2t Off	0.05	0.1	0.2	0.3	0.4				
		I^2t On		0.1	0.2	0.3	0.4				
	(I^2t Off)	Min. Trip Time(ms)	20	80	160	260	360				
		Max. Trip Time(ms)	80	140	240	340	440				

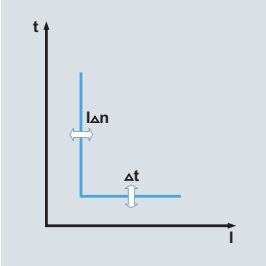

Earth leakage (Option)											
Current setting (A)	IΔn		0.5	1	2	3	5	10	20	30	Off
Time delay (ms) Accuracy: ±15%	Δt	Alarm Time(ms)	140	230	350	800	950				
		Trip Time(ms)	140	230	350	800					

Note) Earth leakage function is available with ZCT or external CT

P type: 「Power meter」 type

- Overload protection
  - -Long-time delay
  - -Thermal
- Short-circuit protection
  - -Short-time delay / Instantaneous
  - -I^2t On/Off optional (for short-time delay)
- Ground fault protection
  - -I^2t On/Off optional
- Protection for Over voltage/Under voltage/Over frequency/Under frequency/Unbalance/Reverse power
- Realization of protective coordination by ZSI (Zone Selective Interlocking)
- The fine-adjustable setting by knob and Key
- IDMTL setting (SIT, VIT, EIT, DT curve)
  - - Basic setting : “None”. Thermal curve.
- Measurement and Display Function
  - -High detailed measurement for 3 phase current/Voltage/Power/Energy/Phase angle/Frequency/PF/Demand
  - -128 x 128 Graphic LCD
  - -Indicates current/voltage Vector Diagram and Waveform
- Fault recording
  - -Records Max. up to 256 fault information about fault type, fault phase, fault value, occurrence time of fault
- Event recording
  - -Records events of device related to setting change, operation and state change. (Max. up to 256)
- SBO (Select Before Operation)
  - -High reliability for control and setting change method
- 3 DO(Digital output)
  - -Programmable for alarm, trip and general DO
- Communication
  - -Modbus/RS485
  - -Profibus-DP

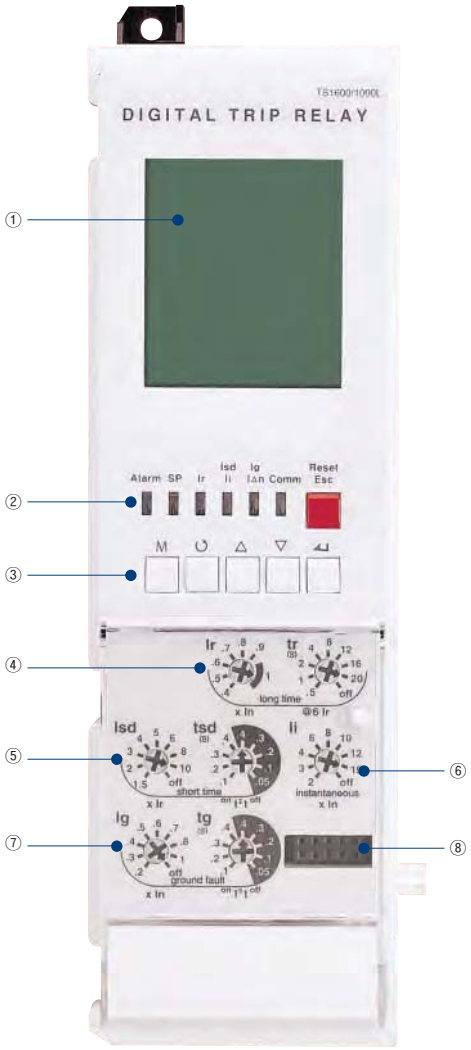

① **Graphic LCD: Indication of measurement and information**

② **LED: Indication of trip info. and overload state**

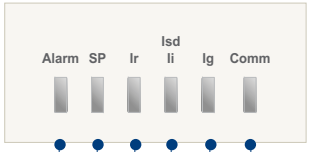

- Comm: LED indicating comm. state (Blink when running)
- Ig: LED indicating ground-fault
- Isd/Ii: LED indicating short-time or instantaneous tripping
- Ir: LED indicating long-time delay
- SP: Self-protection and battery test LED
- Alarm: LED indicating an overload (Turn on above 90%, Blink above 105%)

③ **Key: Move to menu or reset**

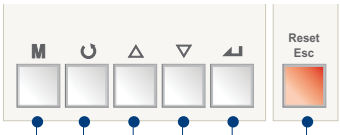

- Reset/ESC: Fault reset or ESC from menu
- Enter: Enter into secondary menu or setting input
- Up/Down: Move the cursor up/down on screen or increase/decrease a setting value
- Right/Left: Move the cursor or setting right/left on screen (Rotation)
- Menu: Menu display ↔ Measurement display

④ **Ir: Long-time current setting, tr: Long-time tripping delay setting**

⑤ **Isd: Short-time current setting, tsd: Short-time tripping delay setting**

⑥ **Ii: Instantaneous current setting**

⑦ **Ig: Ground fault current setting, tg: Ground fault tripping delay setting**

⑧ **Test terminal: OCR test terminal (Connected with OCR tester)**

MCCBs for power distribution up to 1600A

Susol

Protection

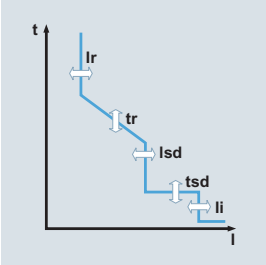

Long time											
Current setting (A)	Ir = In×...		0.4	0.5	0.6	0.7	0.8	0.9	1.0		
Time delay (s)	tr@(1.5×Ir)		12.5	25	50	100	200	300	400	500	Off
Accuracy: ±15% or below	tr@(6.0×Ir)		0.5	1	2	4	8	12	16	20	Off
100ms	tr@(7.2×Ir)		0.34	0.69	1.38	2.7	5.5	8.3	11	13.8	Off
Short time											
Current setting (A) Accuracy: ±10%	Isd = Ir×...		1.5	2	3	4	5	6	8	10	Off
Time delay (s) @ 10×Ir	tsd	I^2t Off	0.05	0.1	0.2	0.3	0.4				
		I^2t On		0.1	0.2	0.3	0.4				
	(I^2t Off)	Min. Trip Time(ms)	20	80	160	260	360				
		Max. Trip Time(ms)	80	140	240	340	440				
Instantaneous											
Current setting (A)	Ii = In×...		2	3	4	6	8	10	12	15	Off
Tripping time			50(±10ms)								

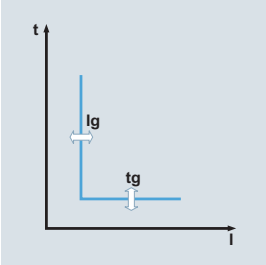

Ground fault											
Pick−up (A) Accuracy: ±10%(Ig>0.4In) ±20%(Ig≤0.4In)	Ig = In×...		0.2	0.3	0.4	0.5	0.6	0.7	0.8	1.0	Off
Time delay (s) @ 1×In	tg	I^2t Off	0.05	0.1	0.2	0.3	0.4				
		I^2t On		0.1	0.2	0.3	0.4				
	(I^2t Off)	Min. Trip Time(ms)	20	80	160	260	360				
		Max. Trip Time(ms)	80	140	240	340	440				

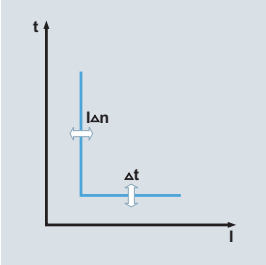

Earth leakage (Option)											
Current setting (A)	IΔn		0.5	1	2	3	5	10	20	30	Off
Time delay (ms) Accuracy: ±15%	Δt	Alarm Time(ms)	140	230	350	800	950				
		Trip Time(ms)	140	230	350	800					

Note) Earth leakage function is available with ZCT or external CT

PTA(Pre Trip Alarm)										
Current setting (A)	Ip = Ir x ···	0.6	0.65	0.7	0.75	0.8	0.85	0.9	0.95	1
Time delay (s) Accuracy: ±15%	tp@(1.2×Ip)	1	5	10	15	20	25	30	35	Off

Other protection		Pick-up			Time delay(s)		
		Setting range	Step	Accuracy	Setting range	Step	Accuracy
Under voltage		80V ~ 0V_Pick-up	1V	±5%	1.2~40sec	0.1sec	±0.1sec
Over voltage		UV_Pick-up ~ 980V	1V	±5%			
Voltage unbalance		6% ~ 99%	1%	±2.5% or (*±10%)			
Reverse power		10~500 kW	1kW	±10%	0.2~40sec		
Over power		500~5000 kW	1kW	±10%			
Current unbalance		6% ~ 99%	1%	±2.5% or (*±10%)	1.2~40sec		
Over frequency	60Hz	UF_Pick-up ~ 65	1Hz	±0.1Hz			
	50Hz	UF_Pick-up ~ 55	1Hz	±0.1Hz			
Under frequency	60Hz	55Hz ~ OF_Pick-up	1Hz	±0.1Hz			
	50Hz	45Hz ~ OF_Pick-up	1Hz	±0.1Hz			

S type: 「Supreme meter」 type

- ■ Overload protection
  - -Long-time delay
  - -Thermal
- ■ Short-circuit protection
  - -Short-time delay / Instantaneous
  - -I^2t On/Off optional (for short-time delay)
- ■ Ground fault protection
  - -I^2t On/Off optional
- ■ Protection for Over voltage/Under voltage/Over frequency/Under frequency/Unbalance/Reverse power
- ■ Realization of protective coordination by ZSI (Zone Selective Interlocking)
- ■ The fine-adjustable setting by knob and Key
- ■ IDMTL setting (SIT, VIT, EIT, DT curve)
  - - Basic setting : “None”. Thermal curve.
- ■ Measurement and Display Function
  - -High detailed measurement for 3 phase current/Voltage/Power/Energy/ Phase angle/Frequency/PF/Demand
  - -128 x 128 Graphic LCD
  - -Indicates current/voltage Vector Diagram and Waveform
- ■ Fault recording
  - -Records Max. up to 256 fault information about fault type, fault phase, fault value, occurrence time of fault
  - -Fault wave recording: records the latest fault wave
- ■ Event recording
  - -Records events of device related to setting change, operation and state change. (Max. up to 256)
- ■ SBO (Select Before Operation)
  - -High reliability for control and setting change method
- ■ Power quality analysis
  - -Measurement for 1st~63th harmonics
  - -THD, TDD, k-Factor
  - -Voltage/current waveform capture
- ■ 3 DO(Digital output)
  - -Programmable for alarm, trip and general DO
- ■ Communication
  - -Modbus/RS485
  - -Profibus-DP

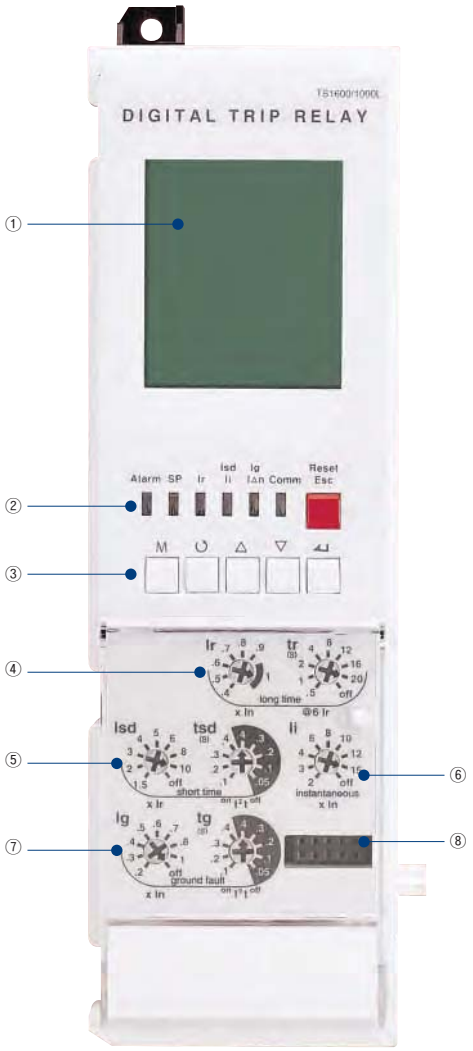

① **Graphic LCD: Indication of measurement and information**

② **LED: Indication of trip info. and overload state**

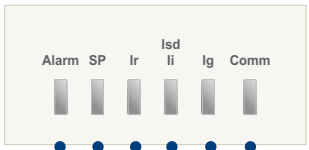

- Comm: LED indicating comm. state (Blink when running)
- Ig: LED indicating ground-fault
- Isd/Ii: LED indicating short-time or instantaneous tripping
- Ir: LED indicating long-time delay
- SP: Self-protection LED and battery test LED
- Alarm: LED indicating an overload (Turn on above 90%, Blink above 105%)

③ **Key: Move to menu or reset**

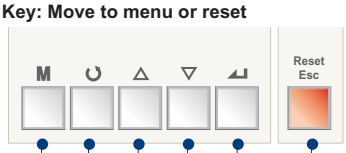

- Reset/ESC: Fault reset or ESC from menu
- Enter: Enter into secondary menu or setting input
- Up/Down: Move the cursor up/down on screen or increase/decrease a setting value
- Right/Left: Move the cursor or setting right/left on screen (Rotation)
- Menu: Menu display ↔ Measurement display

④ **Ir: Long-time current setting, tr: Long-time tripping delay setting**

⑤ **Isd: Short-time current setting, tsd: Short-time tripping delay setting**

⑥ **Ii: Instantaneous current setting**

⑦ **Ig: Ground fault current setting, tg: Ground fault tripping delay setting**

⑧ **Test terminal: OCR test terminal (Connected with OCR tester)**

MCCBs for power distribution up to 1600A

Susol

Protection

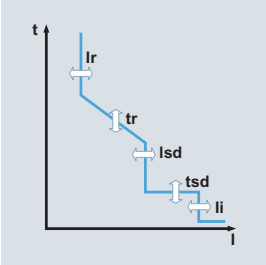

Long time											
Current setting (A)	Iu = In×...		0.4	0.5	0.6	0.7	0.8	0.9	1.0		
Time delay (s)	tr@(1.5×Ir)		12.5	25	50	100	200	300	400	500	Off
Accuracy: ±15% or below	tr@(6.0×Ir)		0.5	1	2	4	6	12	16	20	Off
100ms	tr@(7.2×Ir)		0.34	0.69	1.38	2.7	5.5	8.3	11	13.8	Off
Short time											
Current setting (A) Accuracy: ±10%	Isd = Ir×...		1.5	2	3	4	5	6	8	10	Off
Time delay (s) @ 10×Ir	tsd	I^2t Off	0.05	0.1	0.2	0.3	0.4				
		I^2t On		0.1	0.2	0.3	0.4				
	(I^2t Off)	Min. Trip Time(ms)	20	80	160	260	360				
		Max. Trip Time(ms)	80	140	240	340	440				
Instantaneous											
Current setting (A)	Ii = In×...		2	3	4	6	8	10	12	15	Off
Tripping time			50(±10ms)								

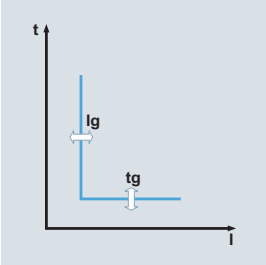

Ground fault											
Pick-up (A) Accuracy: ±10%(Ig>0.4In) ±20%(Ig≤0.4In)	Ig = In×...		0.2	0.3	0.4	0.5	0.6	0.7	0.8	1.0	Off
Time delay (s) @ 1×In	tg	I^2t Off	0.05	0.1	0.2	0.3	0.4				
		I^2t On		0.1	0.2	0.3	0.4				
	(I^2t Off)	Min. Trip Time(ms)	20	80	160	260	360				
		Max. Trip Time(ms)	80	140	240	340	440				

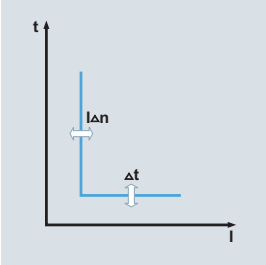

Earth leakage (Option)											
Current setting (A)	IΔn		0.5	1	2	3	5	10	20	30	Off
Time delay (ms) Accuracy: ±15%	Δt	Alarm Time(ms)	140	230	350	800	950				
		Trip Time(ms)	140	230	350	800					

Note) Earth leakage function is available with ZCT or external CT

PTA(Pre Trip Alarm)										
Current setting (A)	Ip = Ir x ···	0.6	0.65	0.7	0.75	0.8	0.85	0.9	0.95	1
Time delay (s) Accuracy: ±15%	tp@(1.2×Ip)	1	5	10	15	20	25	30	35	Off

Other protection		Pick-up			Time delay(s)		
		Setting range	Step	Accuracy	Setting range	Step	Accuracy
Under voltage		80V ~ 0V_Pick-up	1V	±5%	1.2~40sec	0.1sec	±0.1sec
Over voltage		UV_Pick-up ~ 980V	1V	±5%			
Voltage unbalance		6% ~ 99%	1%	±2.5% or (*±10%)			
Reverse power		10~500 kW	1kW	±10%	0.2~40sec		
Over power		500~5000 kW	1kW	±10%			
Current unbalance		6% ~ 99%	1%	±2.5% or (*±10%)	1.2~40sec		
Over frequency	60Hz	UF_Pick-up ~ 65	1Hz	±0.1Hz			
	50Hz	UF_Pick-up ~ 55	1Hz	±0.1Hz			
Under frequency	60Hz	55Hz ~ OF_Pick-up	1Hz	±0.1Hz			
	50Hz	45Hz ~ OF_Pick-up	1Hz	±0.1Hz			

Operation characteristic

Long-time delay (L)

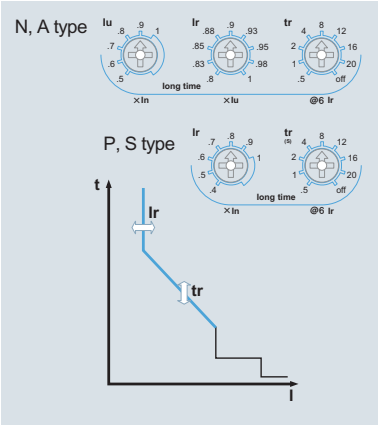

The function for overload protection which has time delayed characteristic in inverse ratio to fault current.

1. Standard current setting knob: Ir
   1) Setting range in P type and S type: (0.4-0.5-0.6-0.7-0.8-0.9-1.0)×In
   2) Setting range in N type and A type: (0.4 ~1.0)×In
      - Iu: (0.5-0.6-0.7-0.8-0.9-1.0)×In
      - Ir: (0.8-0.83-0.85-0.88-0.9-0.93-0.95-0.98-1.0)×Iu
2. Time delay setting knob: tr
   - Standard operating time is based on the time of 6×Ir
   - Setting range: 0.5-1-2-4-8-12-16-20-Off sec (9 modes)
3. Relay pick-up current
   - When current over (1.15)×Ir flows in, relay is picked up.
4. Relay operates basing on the largest load current among R/S/T/N phase.

Short-time delay (S)

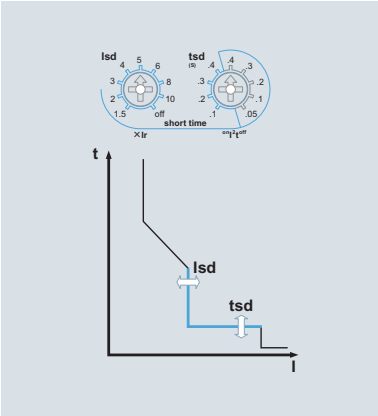

The function for fault current (over current) protection which has definite time characteristic and time delayed in inverse ratio to fault current.

1. Standard current setting knob: Isd
   - Setting range: (1.5-2-3-4-5-6-8-10-Off)×Ir
2. Time delay setting knob: tsd
   - Standard operating time is based on the time of 10×Ir.
   - Inverse time (I^2t On): 0.1-0.2-0.3-0.4 sec
   - Definite time (I^2t Off): 0.05-0.1-0.2-0.3-0.4 sec
3. Relay operates basing on the largest load current among R/S/T/N phase.
4. When ZSI function was set, the protection operation will take place instantaneously with input absence by downstream devices. It is advised to disable its ZSI function on the last downstream device.

Instantaneous (I)

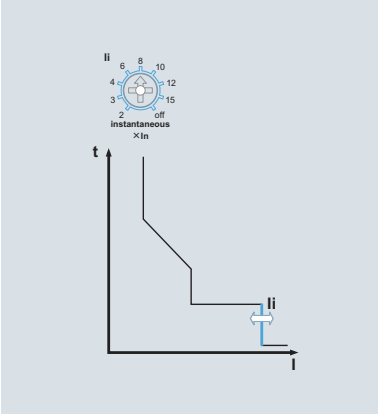

The function for breaking fault current above the setting value within the shortest time to protect the circuit from short-circuit.

1. Standard current setting knob: Ii
   - Setting range: (2-3-4-6-8-10-12-15-Off)×In
2. Relay operates basing on the largest load current among R/S/T/N phase.
3. Total breaking time is below 50 (±10)ms.

MCCBs for power distribution up to 1600A

Susol

Ground Fault (G)

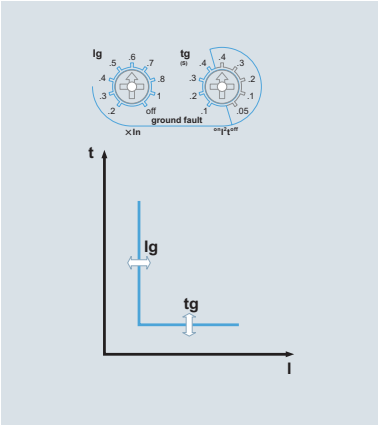

The function for breaking ground fault current above setting value after time-delay to protect the circuit from ground fault.

1. Standard setting current knob: Ig
   - Setting range: (0.2-0.3-0.4-0.5-0.6-0.7-0.8-1.0-Off)×In
2. Time delay setting knob: tg
   - Inverse time (I^2t On): 0.1-0.2-0.3-0.4 sec
   - Definite time (I^2t Off): 0.05-0.1-0.2-0.3-0.4 sec
3. Ground fault current is vector sum of each phase current. Therefore, 3Pole products may operate under its phase-unbalance including ground fault situations.(R+S+T+(N) Phase)
4. When ZSI function was set, the protection operation will take place instantaneously with input absence by downstream devices. It is advised to disable its ZSI function on the last downstream device.
5. Ground-fault functions are basically provided with products equipped with a trip relay through its internal CT that is embedded in each phase.(But, it can 't be used with earth-leakage protection function at the same time)

Earth Leakage (G) - Option

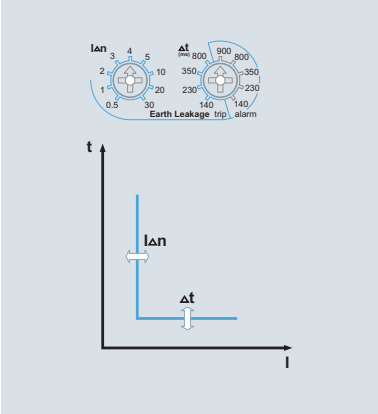

The function for breaking earth leakage current above setting value after time delay to protect the circuit from earth leakage. (A, P, S type)

1. Standard setting current knob: IΔn
   - Setting range: 0.5-1-2-3-4-5-10-20-30-Off (A)
2. Time delay setting knob: Δt
   - Trip time: 140-230-350-800 ms
   - Alarm time: 140-230-350-800-950 ms
3. Settings within its alarm range will prevent its breaker from tripping but activating its alarm.
4. This function is enabled and can be used only with standard ZCT provided by LS or private external CT(secondary output 5A) selected by customers.
5. When ZSI function was set, the protection operation will take place instantaneously with input absence by downstream devices. It is advised to disable its ZSI function on the last downstream device.

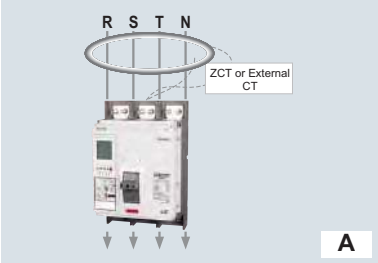

※Use cautions with earth-leakage current settings

- When using a standard ZCT provided by LS, the setting range is from 0.5 to 30A which is based on its primary current. But MCCB installed like A type (displayed on the left side) should only be cable-connected and its rated current should be less than 1600A.
- When using other CT selected by customers, the setting range is from 0.5 to 5A based on its secondary current.(Secondary output rating : 5A)
  Hence, under 100:5A CT, if trip relay is set to 0.5A, earth-leakage exceeding 10A will activate its operation (0.5A×20 = 10A)

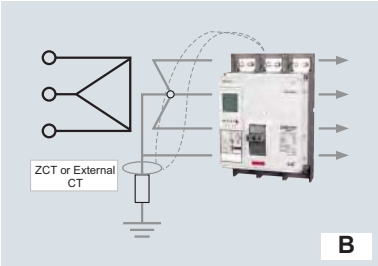

※Guideline for the external CT usage

- Earth-leakage protection characteristics using the standard CT which is installed inside of MCCB can protect currents from 20 to 100% range on its rated current.
- As rated currents on MCCB increases, current that is covered by its standard CT increase as well. This can not protect against small leakage currents.
  ex) 400A MCCB Min. Earth-leakage current 400A×20% =80A
  4000A MCCB Min. Earth-leakage current 4000A×20% =800A
- Therefore, customers are advised to install an external CT in accordance with its rated currents within its systems. And choose trip relay(E, X type) which is required with external CT usage in order to provide earth-leakage functions.

Measurement function

	Class.	Measurement element	Detailed element	Unit	Display range	Accuracy
A type	Current	Line current	Ia,Ib,Ic	A	80A~65,535A	±3%
		Normal current	I_1			
		Reverse current	I_2			
P type	Voltage	Line voltage	Vab,Vbc,Vca	V	60~690V	±1%
		Phase voltage	Va,Vb,Vc			±1%
		Normal voltage	V_1			
		Reverse voltage	V_2			
	Angle	Line-to-line Line-to-current	∠VabIa, ∠VabIb, ∠VabIc, ∠VabVbc, ∠VabVca	°	0~360 °	±1 °
		Phase-to-phase	∠VaVb,∠VaVc			±1 °
		Phase-to-current	∠VaIa, ∠VbIb, ∠VcIc			±1 °
	Power	Active power	Pa(ab), Pb(bc), Pc(ca), P	kW	1kW~99,999kW	±3%
		Reactive power	Qa(ab), Qb(bc), Qc(ca), Q	kVar	1kVar~99,999kVar	±3%
		Apparent power	Sa(ab), Sb(bc), Sc(ca), S	kVA	1kVA~99,999kVA	±3%
	Energy	Active energy	WHa(ab), WHb(bc), WHc(ca), WH	kWh MWh	1kWh~9999.99MWh	±3%
		Reactive energy	VARHa(ab), VARHb(bc), VARHc(ca), VARH	kVarh Mvarh	1kVarh~9999.99MVarh	±3%
		Reverse active energy	rWHa(ab), rWHb(bc), rWHc(ca), rWH	kWh MWh	1kWh ~9999.99MWh	±3%
	Freq.	Frequency	F	Hz	45~65Hz	
	Power factor	Power factor(PF)	PFa(ab), PFb(bc), PFc(ca), PF		+: Lead, -: Lag	
	Unbalance	Unbalance rate	Iunalance, Vunbalance	%	0.0~100.0	
	Demand	Active power demand	Peak demand	kW	1kW~99999kW	
		Current demand	Peak demand	A	80A~65,535A	
S type	Harmonics	Voltage harmonics	1st~63th harmonics of Va(ab),Vb(bc),Vc(ca)	V	60~690V	
		Current harmonics	1st~63th harmonics of Ia,Ib,Ic	A	80A~65,535A	
		THD, TDD		%	0.0~100.0	
		K-Factor -			0.0~100.0	

Voltage module

For P and S type Trip relay, separate voltage module is necessary to measure other element besides current (Separate purchase is needed)
- Voltage input range: AC 60~690V

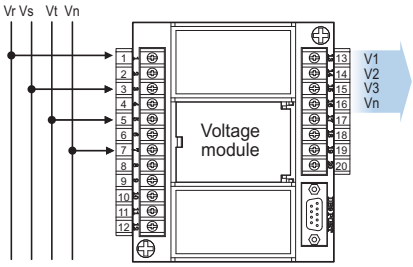

3P4W wiring

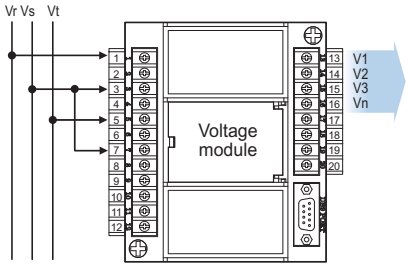

3P3W wiring

ZSI - Zone Selective Interlocking (A, P, S type)

Zone-selective interlocking drops delay time that eliminates faults for breakers. It minimizes the shock that all kinds of electric machineries get under fault conditions.

1. In case of that short time-delay or ground fault accident occurs at ZSI built in system, the breaker at accident site sends ZSI signal to halt upstream breaker's operation.
2. To eliminate a breakdown, trip relay of MCCB at accident site activates trip operation without time delay.
3. The upstream breaker that received ZSI signal adhere to pre-set short time-delay or ground fault time-delay for protective coordination in the system.
   However upstream breaker that did not receive its signal will trip instantaneously.
4. For ordinary ZSI operation, it should arrange operation time accordingly so that downstream circuit breakers will react before upstream ones under overcurrent/short time delay/ ground fault situations.
5. ZSI connecting line needs to be Max. 3m.

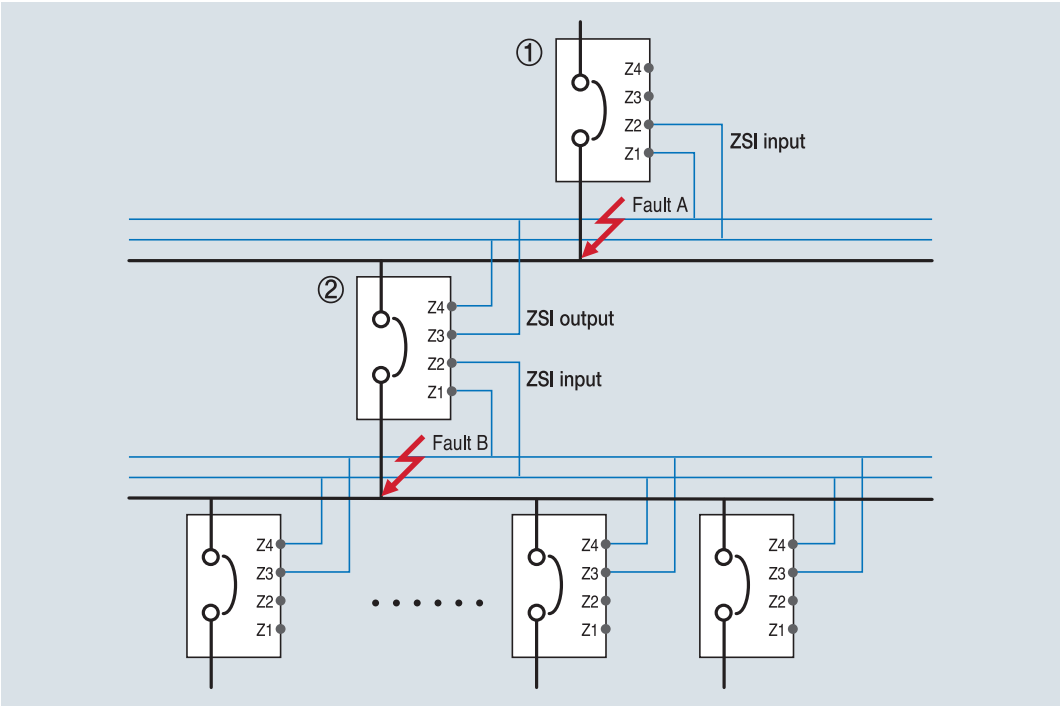

1) Occurrence of fault A
   - Only breaker ① performs instantaneous trip operation.
2) Occurrence of fault B
   - Breaker ② performs instantaneous trip operation,
     breaker ① performs trip operation after prearranged delay time
   - But if breaker ② did not break the fault normally,
     breaker ① performs instantaneous trip operation to protect system.

Remote reset and digital I/O (A, P, S type)

In case of that MCCB operates due to accidents or over current, Trip relay indicates the information of the accident through the LED and LCD. Trip relay A, P and S type is possible to perform the remote reset by digital input, and have 3 DO(Digital output).

1. Methods to reset Trip relay is to push the Reset button on the frontal side and to use the remote reset.

2. Digital input
   - [R11-R22] input: Remote reset
   - [Z1-Z2] Input: ZSI input
   - [E1-E2] Input: ZCT for earth leakage detection or external CT input

※All DI are dry contact that has 3.3V of recognition voltage. When inputting close by SSR(Solid State Relay) or open-collector, connect collector(Drain) to R11.

3. Digital output 3a(524, 534, 544-513)
   - Fault output: Long/Short time delay, Instantaneous, Ground fault, UVR, OVR, UFR, OFR, rPower, Vunbal, Iunbal (Maintains state as Latch form until user pushes reset.)
   - General DO: when setting L/R as remote, it is available to control close/open remotely by using communication.

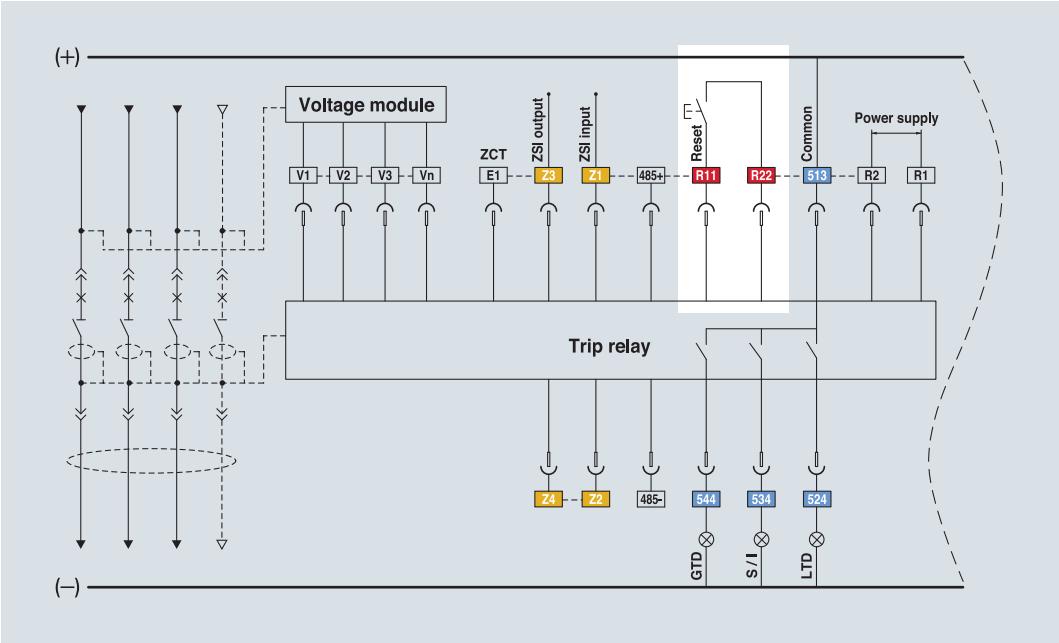

Trip Relay	Digital Output	Long time	Short time	Instantaneous	Ground	Overload Alarm	OVR	UVR	rPower	Vunbal	Iunbal	OFR	UFR	OPR	Note
P, S type	DO1(524)	●	○	○	○	○	○	○	○	○	○	○	○	○	Programmable
	DO2(534)	○	●	●	○	○	○	○	○	○	○	○	○	○	
	DO3(544)	○	○	○	●	○	○	○	○	○	○	○	○	○	
A type	DO1(524)	●	×	×	×	Not available									Fixed
	DO2(534)	×	●	●	×										
	DO3(544)	×	×	×	●										

Communication

Modbus/RS-485

- Operation mode: Differential
- Distance: Max. 1.2km
- Cable :
  General RS-485 shielded twist 2-pair cable
- Baud rate :
  9600bps, 19200bps, 38400bps
- Transmission method: Half-Duplex
- Termination: 150Ω

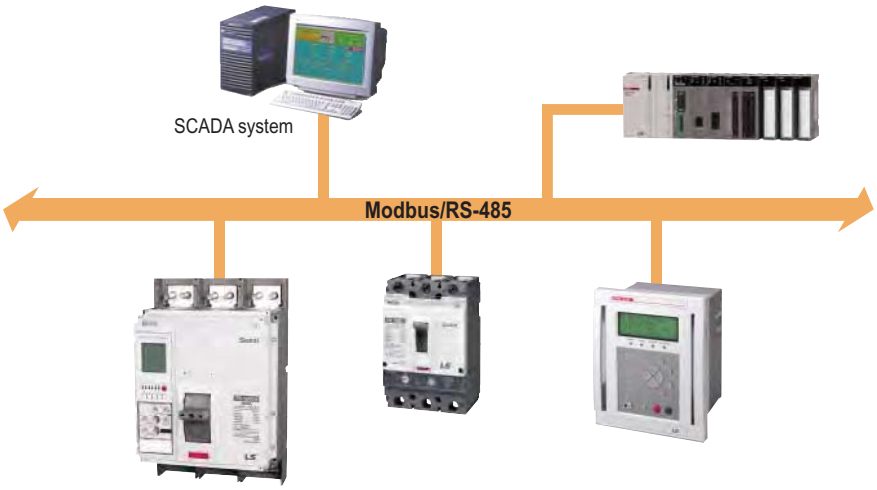

Profibus-DP

- Profibus-DP module is installed separately (Option)
- Operation mode: Differential
- Distance: Max. 1.2km
- Cable :
  Profibus-DP shielded twist 2-pair cable
- Baud rate: 9600bps~12Mbps
- Transmission method: Half-Duplex
- Termination: 150Ω
- Standard: EN 50170 / DIN 19245

Profibus-DP communication module (Option)

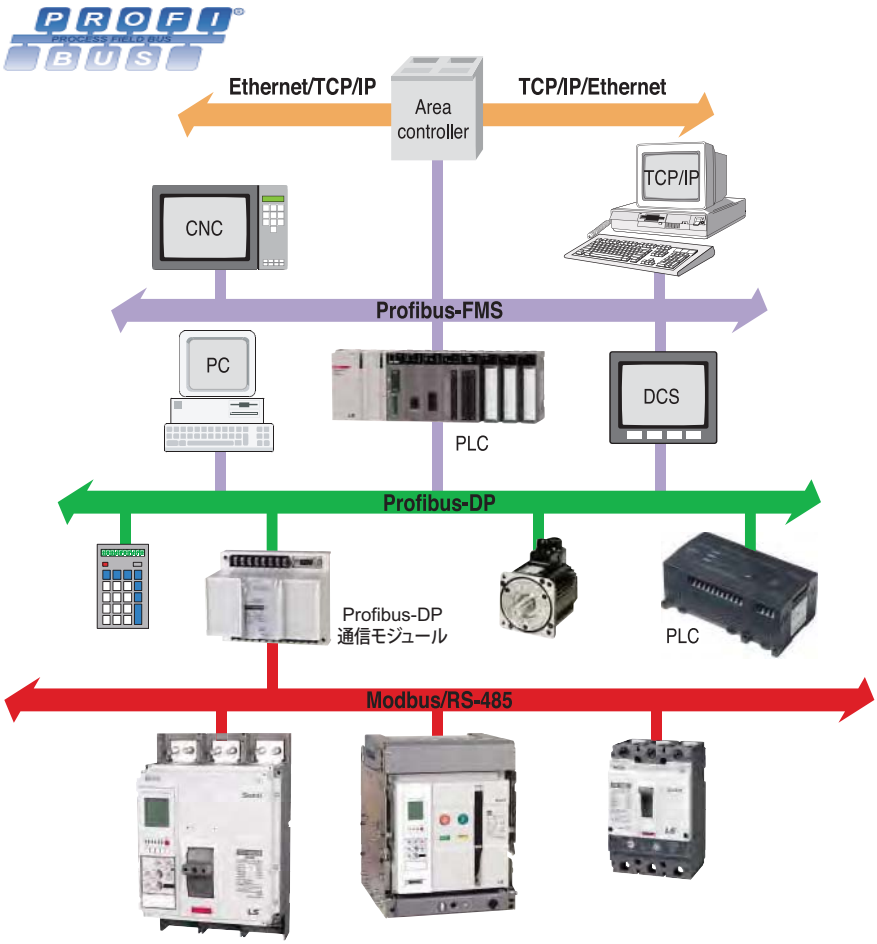

Event & fault recording (P, S type)

When there are events such as setting change, Info. change, error of self-diagnose, state change, P and S type record Max. up to 256 information of the events in accordance with time(ms). In addition, they can record Max. up to 256(up to 10 for A type) information of the faults such as fault cause, fault phase, fault value and so on in accordance with time(ms).

Event information display

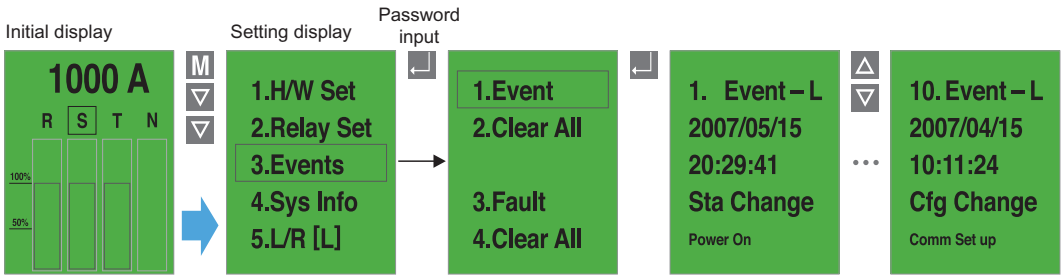

Fault information display

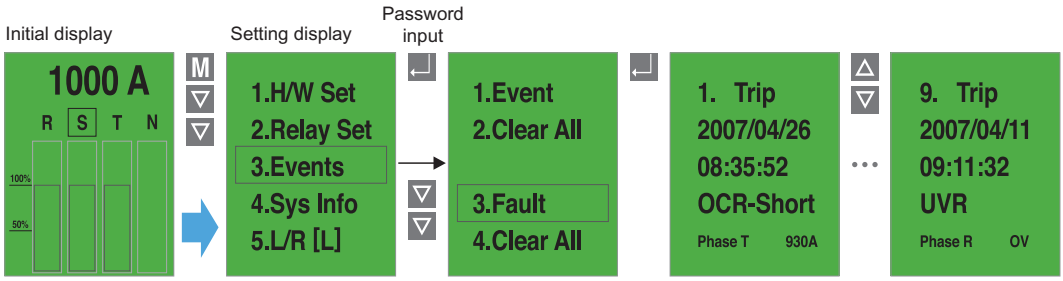

System information

P and S type can indicate information as followings with the information of the MCCB.
- Present time: year/month/date/hour/minute/ms
- MCCB current ratings
- N-phase current ratings: 100%
- Frequency information: 60Hz / 50Hz
- Closing numbers of breaker: CB ON numbers
- Trip relay operating time: OCR ON time
- ON time of breaker: CB ON time
- S/W ver. information

System information display

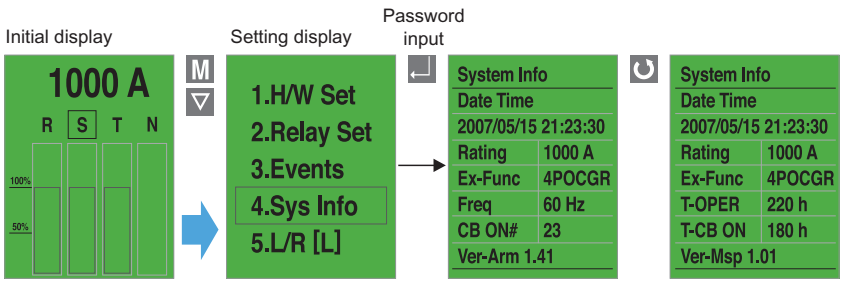

System block diagram

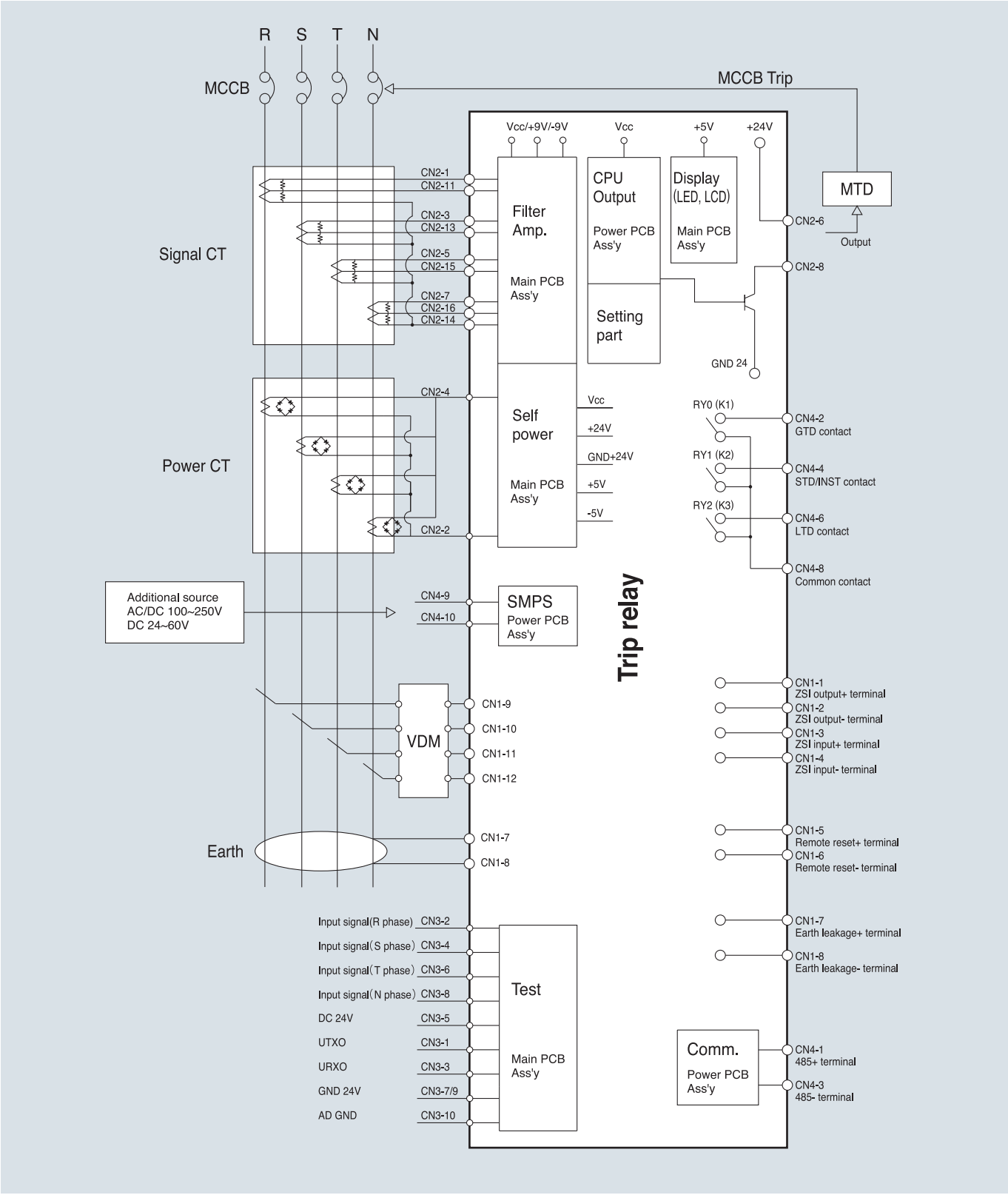

Installation and Handling

Withdrawal Wiring for Trip Relay

⚠ Caution

1. In case of disassembling and assembling the main cover, screw should be tightened in specific torque of1.5N.m (15.3kgf.cm)
2. In case of disassembling and assembling the main cover by over tightening torque, the parts of MCCB can be damaged.

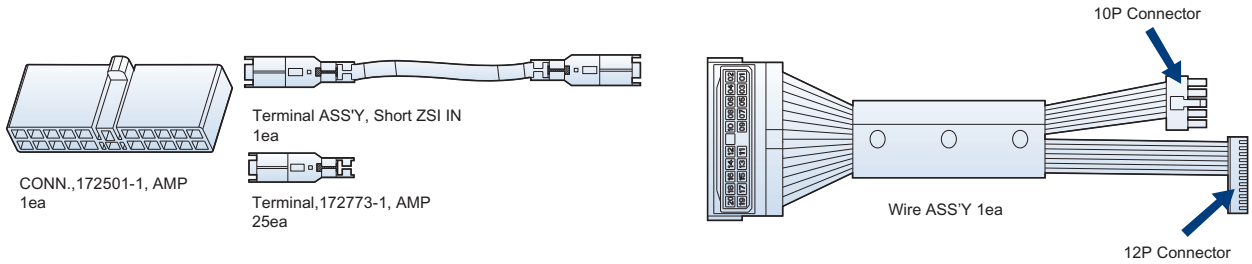

WIRE ASS'Y OCR types

No.	Drawing No.	Part Name	Functions	OCR
1	76671176262	WIRE ASS'Y AG AC OCR	Communication, Digital Output, ZSI, Remote Reset	A Type
2	76671176263	WIRE ASS'Y A ZK PS CKA OCR	Communication, Digital Output, ZSI, Remote Reset, Earth Leakage(<30A), Voltage Module	P, S Type
3	76671176264	WIRE ASS'Y AE AX PX SX OCR	Communication, Digital Output, ZSI, Remote Reset, Earth Leakage(>30A), Voltage Module	P, S Type

Components of wire ass'y OCR and types

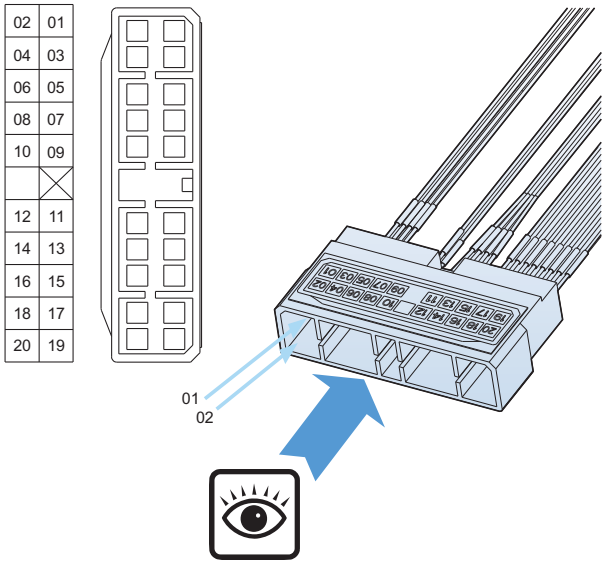

Terminal number and Description

Number	Marking	Description
01	485+	Comm. +
02	485-	Comm. -
03	R1	Power +
04	R2	Power -
05	524	Relay Output (Long time)
06	534	Relay Output (Short time/Instantaneous)
07	544	Relay Output (Ground fault/PAL)
08	513	Relay Output Common
09	Z3	ZSI Out +
10	Z4	ZSI Out -
11	Z1	ZSI In +
12	Z2	ZSI In -
13	R11	Remote Reset +
14	R22	Remote Reset -
15	E1 or B1	Earth Leakage +
16	E2 or B2	Earth Leakage -
17	V1	VR Input
18	V2	VS Input
19	V3	VT Input
20	VN	V Input Common

1. Disassembling cover and short connector

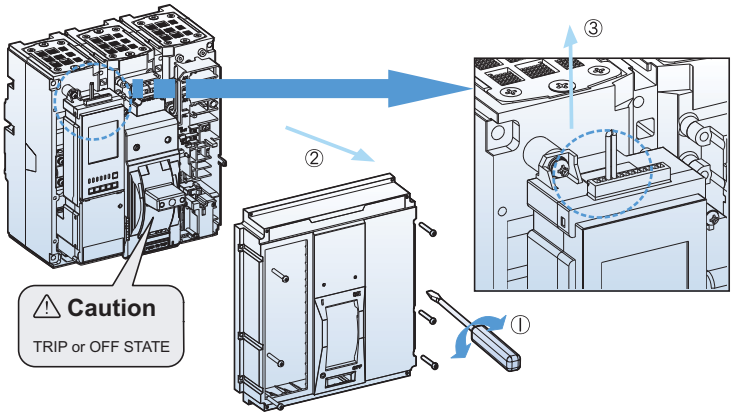

In case of not using ZSI function

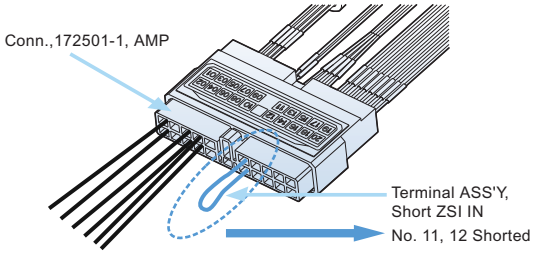

⚠ **Caution** : If not using ZSI function of Trip Relay (OCR), please short ZSI INPUT of terminal No.11,12 (ZSI IN +, ZSI IN-) by using the "TERMINAL ASS'Y,SHORT ZSI IN"

2. Assembly of wire ass'y and withdrawal of wire

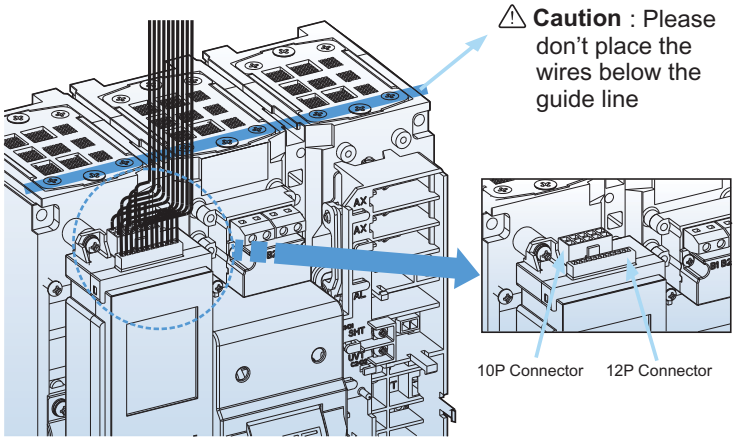

⚠ **Caution** : Please don't place the wires below the guide line

In case of the wiring of Earth Leakage ≥30A

Drawing No.	Part Name
76671176264 WIRE	ASS'Y AE AX PX SX OCR

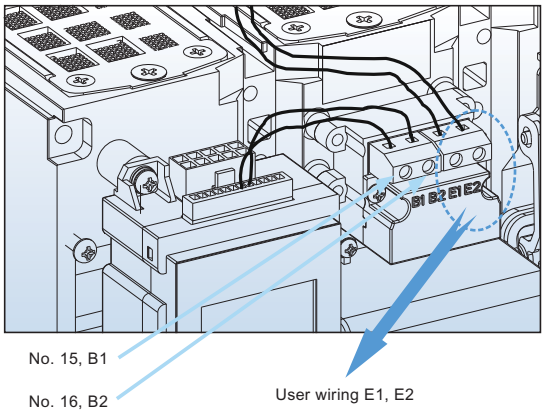

Installation of withdrawal wiring for Trip Relay

Trip Relay (OCR) type and applied wire ass'y

No	Type	WIRE ASS'Y, [ ] ,OCR,TS1600		
		[AG AC] 76671176262	[A ZK PS CKA] 76671176263	[AE AX PX SX] 76671176264
1	NG0			
2	NG5			
3	AG0			
4	AG1	■		
5	AG2	■		
6	AG5			
7	AG6	■		
8	AG7	■		
9	AZ0			
10	AZ1		■	
11	AZ2		■	
12	AZ5			
13	AZ6		■	
14	AZ7		■	
15	AE0			
16	AE1			■
17	AE2			■
18	AE5			
19	AE6			■
20	AE7			■
21	AC1	■		
22	AC2	■		
23	AC6	■		
24	AC7	■		
25	AK1		■	
26	AK2		■	
27	AK6		■	
28	AK7		■	
29	AX1			■
30	AX2			■
31	AX6			■
32	AX7			■

No	Type	WIRE ASS'Y, [ ] ,OCR,TS1600		
		[AG AC] 76671176262	[A ZK PS CKA] 76671176263	[AE AX PX SX] 76671176264
33	PC1		■	
34	PC2		■	
35	PC6		■	
36	PC7		■	
37	PK1		■	
38	PK2		■	
39	PK6		■	
40	PK7		■	
41	PX1			■
42	PX2			■
43	PX6			■
44	PX7			■
45	PA1		■	
46	PA2		■	
47	PA6		■	
48	PA7		■	
49	SC1		■	
50	SC2		■	
51	SC6		■	
52	SC7		■	
53	SK1		■	
54	SK2		■	
55	SK6		■	
56	SK7		■	
57	SX1			■
58	SX2			■
59	SX6			■
60	SX7			■
61	SA1		■	
62	SA2		■	
63	SA6		■	
64	SA7		■	
65	NV1	■		
66	NV6	■		

A-3. Accessories

Accessories for TE series

Overview A-3-1
Electrical auxiliaries A-3-2
Rotary handles A-3-5
Terminals A-3-6
Insulation A-3-7
Interlock A-3-8

Accessories for TD, TS up to 800A

Overview A-3-9
Electrical auxiliaries A-3-10
Rotary handles A-3-14
Locking devices A-3-16
Terminals A-3-19
Insulation A-3-24
Mechanical interlocking device A-3-26
Plug-in device A-3-27
Connector KIT A-3-32
Remote operation A-3-34
Residual Current Devices (RCD) A-3-37
Standard accessories A-3-41

Accessories for TS up to 1600A

Overview A-3-42
Electrical auxiliaries A-3-43
OCR Tester [OT] A-3-47
UVT Time Delay Controller [UDC] A-3-48
Rotary handles A-3-49
Locking devices A-3-53
Terminals A-3-55
Insulation A-3-58
Standard accessories A-3-59

Accessories for TE series

Susol

Overview

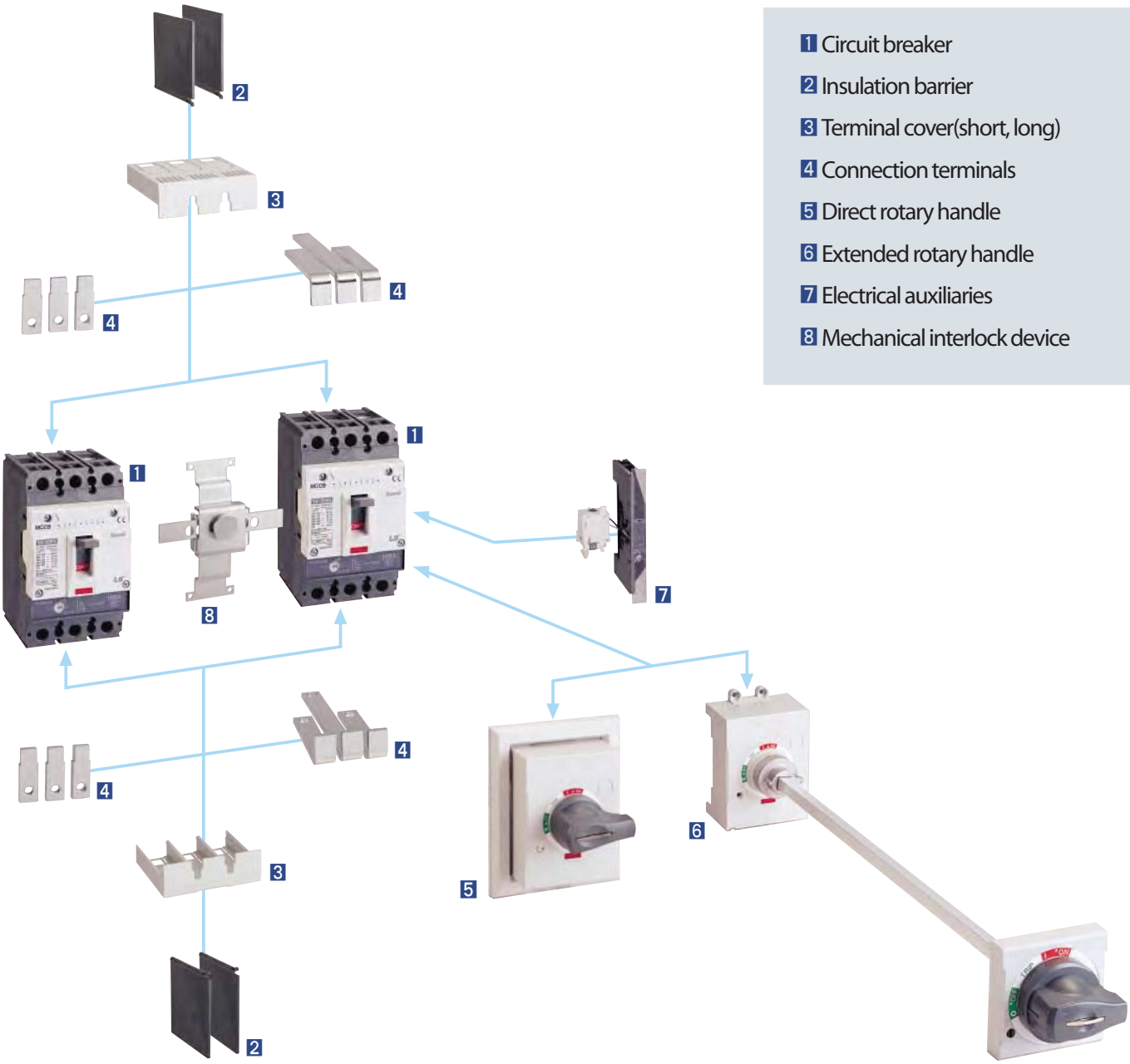

1 Circuit breaker
2 Insulation barrier
3 Terminal cover(short, long)
4 Connection terminals
5 Direct rotary handle
6 Extended rotary handle
7 Electrical auxiliaries
8 Mechanical interlock device

Auxiliary and Alarm switch

Auxiliary switch (AX)

Auxiliary switch is for applications requiring remote “ON” and “OFF” indication.
Each switch contains two contacts having a common connection.
One is open and the other closed when the circuit breaker is open, and viceversa.

Alarm switch (AL)

Alarm switches offer provisions for immediate audio or visual indication of a tripped breaker due to overload, short circuit, shunt trip, or undervoltage release conditions.
They are particularly useful in automated plants where operators must be signaled about changes in the electrical distribution system. This switch features a closed contact when the circuit breaker is tripped automatically. In other words, this switch does not function when the breaker is operated manually.
Its contact is open when the circuit breaker is reset.

Combination switch (AX+AL)

It consists of one auxiliary switch (AX) and one alarm switch (AL) in a body to connect into the same position of the breaker.

Contact

MCCB	ON	OFF	TRIP
AX	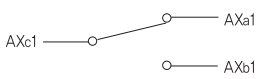	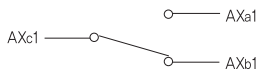	
AL	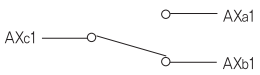		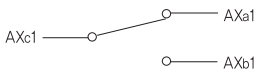

Rating

Conventional thermal current, Ith		5A		
Rated operational current, Ie		Voltage, Ue	Current, Ie	
			Resistive load	Inductive load
	AC 50/60Hz	125V	5	3
		250V	3	2
		500V	-	-
	DC	30V	4	3
		125V	0.4	0.4
		250V	0.2	0.2

Shunt trip, SHT

The shunt trip opens the mechanism in response to an externally applied voltage signal. The releases include coil clearing contacts that automatically clear the signal circuit when the mechanism has tripped.
The shunt release can be installed in the right accessory compartment of the MCCBs.

- Range of operational voltage
  AC: 0.7~1.1Vn, DC: 0.8~1.1Vn
- Frequency(Only AC): 45Hz ~ 65 Hz

Rating

Control voltage, Ue		Power consumption		
		AC (VA)	DC (W)	mA
Voltage	AC/DC 12V	0.35	0.36	30
	AC/DC 24V	0.64	0.65	27
	AC/DC 48V	1.09	1.1	23
	AC/DC 60V	1.2	1.22	20
	AC/DC 100~130V	0.73	0.75	5.8
	AC/DC 200~250V	1.21	1.35	5.4
	AC 380~450V	1.67	-	3.8
	AC 440~500V	1.68	-	3.5
Max.opening time		50ms (max.)		
Tightening torque of terminal screw		8.2 kgf · cm		

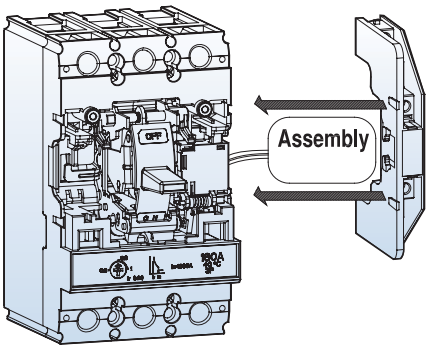

Undervoltage release, UVT

The undervoltage release automatically opens a circuit breaker when voltage drops to a value ranging between 20% to 70% of the line voltage. The operation is instantaneous, and after tripping, the circuit breaker cannot be re-closed again until the voltage returns to 85% of line voltage. Continuously energized, the undervoltage release must be operating before the circuit breaker can be closed. The undervoltage release can be easily installed in the right accessory compartment of the MCCBs.

- Range of tripping voltage: 0.2 ~ 0.7Vn
- MCCB making is possible voltage: 0.85Vn (Exceed)
- Frequency (Only AC): 45Hz ~ 65Hz

Rating

Control voltage, Ue		Power consumption		
		AC (VA)	DC (W)	mA
Voltage	AC/DC 24V	0.64	0.65	27
	AC/DC 48V	1.09	1.1	23
	AC/DC 100~110V	0.73	0.75	5.8
	AC/DC 200~220V	1.21	1.35	5.4
	AC 380~440V	1.67	-	3.8
	AC 440~480V	1.68	-	3.5
Max.opening time		50ms (max.)		
Tightening torque of terminal screw		8.2 kgf · cm		
Operating voltage range	Trip	20~70% Vn		
	Reset/Closing	≥ 0.85Vn		

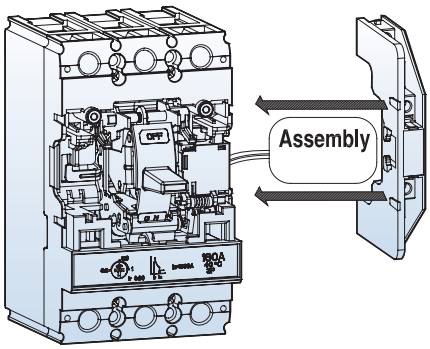

Maximum possibilities

Position	Type	TE160
		3/4P
Left-hand seat	AX 1	
	AL 1	
Right-hand seat	AX 1	
	AL	1
	SHT/UVT 1	

Note) Right-hand seat can be installed only one Electrical Accessary

Rotary handles

The rotary handle operating mechanism is available in either the direct version or in the extended version on the compartment door.
It is always fitted with a compartment door lock and on a request it can be supplied with a key lock in the open position.

Direct rotary handles

MCCB Rotary	handle
TE100/160 DH1E	

Extended rotary handles

MCCB Rotary	handle
TE100/160 EH1E	

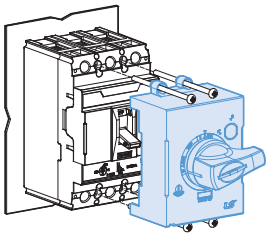

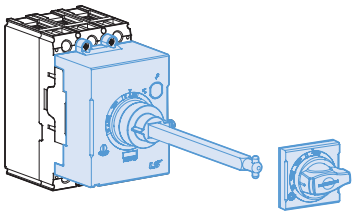

Degree of protections

Type	Degree of protection
DH1E	The access probe of 1.0mm diameter shall not penetrate
EH1E	Totally protected against ingress of dust and water jets from any direction

Terminals

Front connection

Extended terminal

- As an optional part of circuit breaker
- Can increase the pitch of the terminals

MCCB Pole		Type	Feature
TE100/160	3P ET13E		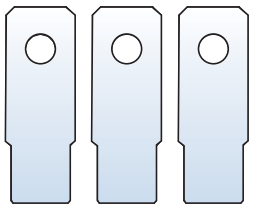
	4P ET14E		

Rear connection

Rear connection terminals are used to adapt Susol TE circuit breakers to switchboards or other application that require rear connection.
These can be connected directly to circuit breakers without any modification.

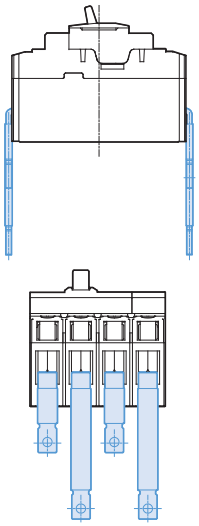

Flat terminals

MCCB Pole		Type	Feature
TE100/160	3P RTF13		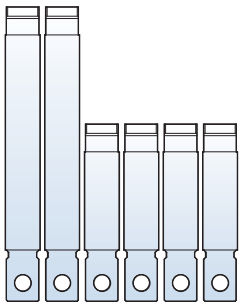
	4P RTF14		

Insulation

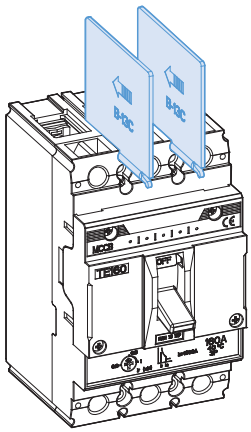

Insulation by barrier

These allow the insulation characteristics between the phases at the connections to be increased.
They are mounted from the front, even with the circuit-breaker already installed, inserting them into the corresponding slots.
They are incompatible with both the insulating terminal covers.
It is possible to mount the phase separating partitions between two circuit-breakers side by side.

Type	Applied MCCB	Set quantity	
B13C	TE100, TE160	3P 4P 4pcs 6pcs	

Insulation by terminal cover

Insulation terminal cover

The terminal covers are applied to the circuit-breaker to prevent accidental contact with live parts and thereby guarantee protection against direct contacts.

Short type covers

Two types by length are available:

Short type covers, ITS
- IP40 degree of protection
- For fixed circuit-breakers with rear terminals and for moving parts of plug-in

Long type covers

Long type covers, ITL
- IP40 degree of protection
- For fixed circuit-breakers with front, front extended, front for cables terminals.

Type Terminal		cover	
Frame type	pole	Long type	Short type
TE100, TE160	3P	ITL13E	ITS13E
	4P	ITL14E	ITS14E

Interlock

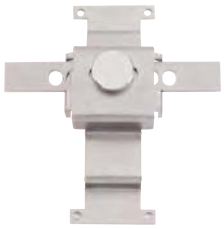

Mechanical Interlock
(Padlocks are not supplied)

Mechanical interlocking device

The mechanical interlock (MIT) can be applied on the front of two breakers mounted side by side, in either the 3-pole or 4-pole version and prevents simultaneous closing of the two breakers.

Fixing is carried out directly on the cover of the breakers.

The front interlocking plate allows installation of a padlock in order to fix the position. (possibility of locking in the O-O position as well)

This mechanical interlocking device is very useful and simple for consisting of manual source-changeover system.

MCCB		Interlock
Frame type	pole	
TE100, TE160	3P MIT13E	
	4P MIT14E	

Operation

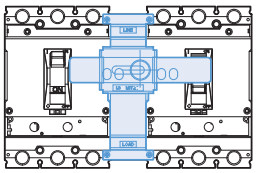

Left MCCB: ON/OFF is possible
Right MCCB: Off lock

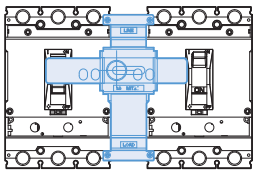

Left MCCB: Off lock
Right MCCB: ON/OFF is possible

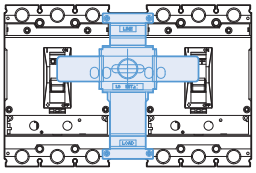

Both MCCBs are of locked

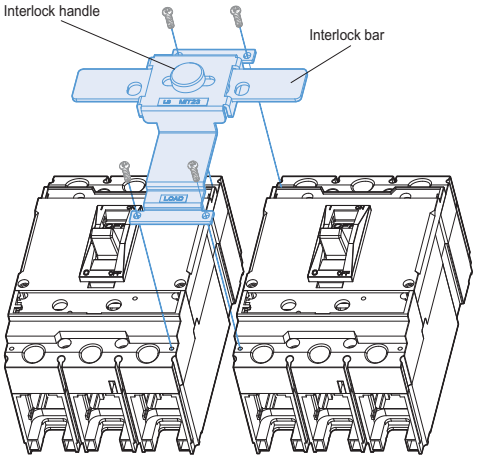

Note) Terminal covers do not use with the interlock.

Accessories for TD/TS series up to 800A

Susol

Overview

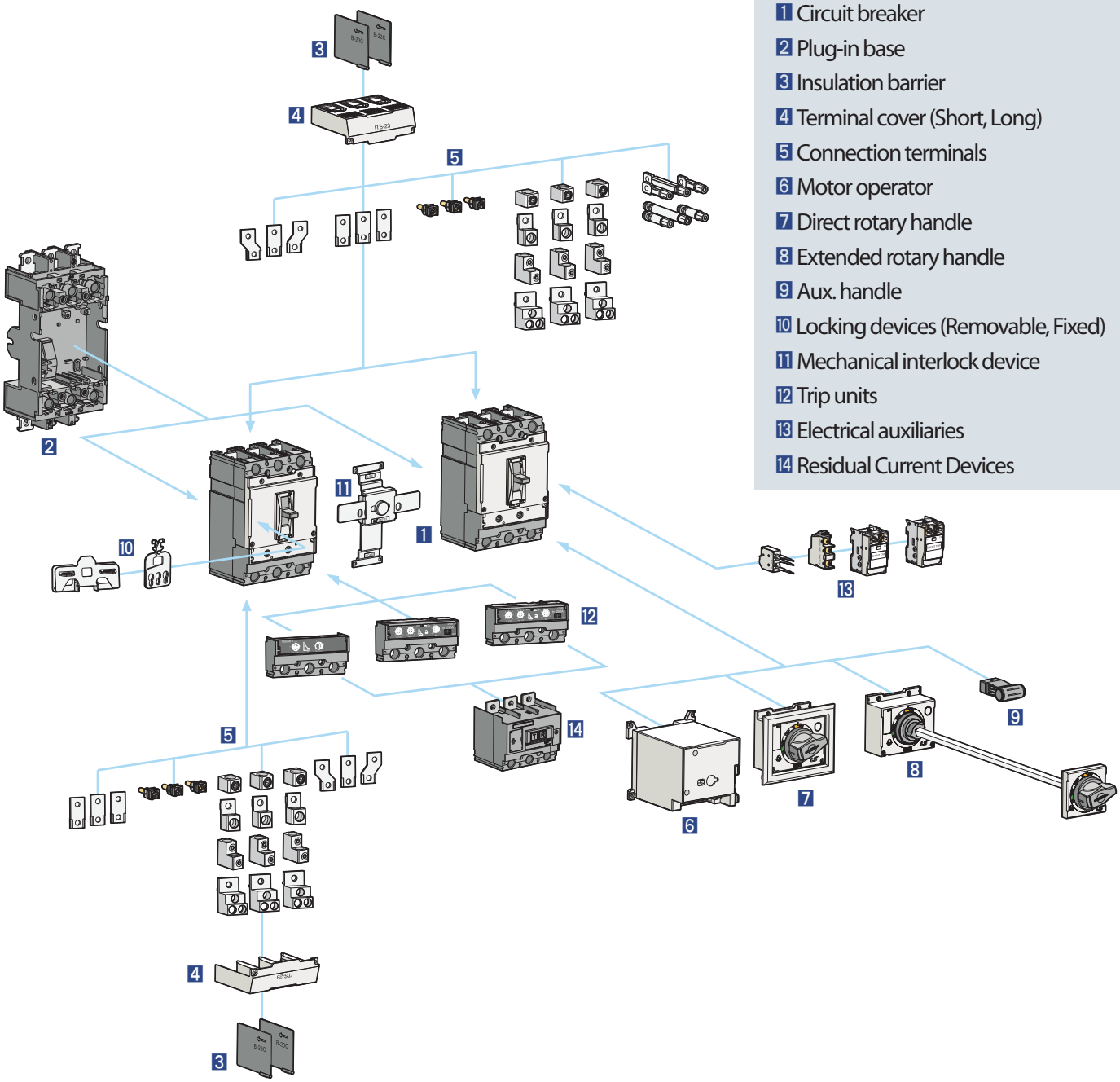

1 Circuit breaker
2 Plug-in base
3 Insulation barrier
4 Terminal cover (Short, Long)
5 Connection terminals
6 Motor operator
7 Direct rotary handle
8 Extended rotary handle
9 Aux. handle
10 Locking devices (Removable, Fixed)
11 Mechanical interlock device
12 Trip units
13 Electrical auxiliaries
14 Residual Current Devices

Electrical auxiliaries

The following devices are installed into all TD & TS circuit breakers regardless of frame size. And, the electrical auxiliaries can be easily installed in the accessory compartment of the circuit breakers which is cassette type.

UVT

Undervoltage release, UVT

The undervoltage release automatically opens a circuit breaker when voltage drops to a value ranging between 35% to 70% of the line voltage. The operation is instantaneous, and after tripping, the circuit breaker cannot be re-closed again until the voltage returns to 85% of line voltage.

Continuously energized, the undervoltage release must be operating before the circuit breaker can be closed. The undervoltage release can be easily installed in the left accessory compartment of the Susol TD and TS circuit-breakers.

- Range of tripping voltage: 0.35 ~ 0.7Vn
- MCCB making is possible voltage: 0.85Vn (exceed)
- Frequency (only AC): 45Hz ~ 65Hz

Technical data

	Control voltage (V)	Consumption			Applicable MCCBs
		AC (VA)	DC (W)	mA	
Power consumption	AC/DC 24V	0.64	0.65	27	TD100, TD160, TS100, TS160, TS250, TS400, TS630, TS800
	AC/DC 48V	1.09	1.10	23	
	AC/DC 110~130V	0.73	0.75	5.8	
	AC 200~240V/DC 250V	1.21	1.35	5.4	
	AC 380~440V	1.67	-	3.8	
	AC 440~480V	1.68	-	3.5	
Max.opening time (ms)		50			
Tightening torque of terminal screw		8.2kgf · cm			
Transformer operating voltage (V) - Drop (Circuit breaker trips) - Rise (Circuit breaker can be switched on)		0.7~1.35Vn ~0.85Vn			

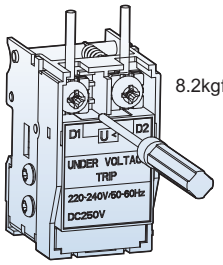

8.2kgf · cm

Electrical auxiliaries

SHT

Shunt release, SHT

The shunt release opens the mechanism in response to an externally applied voltage signal. The releases include coil clearing contacts that automatically clear the signal circuit when the mechanism has tripped.
The shunt release can be installed in the left accessory compartment of the Susol TD & TS circuit-breakers.

- Range of operational voltage: 0.7 ~ 1.1Vn
- Frequency (only AC): 45Hz ~ 65Hz

Technical data

	Control voltage (V)	Consumption			Applicable MCCBs
		AC (VA)	DC (W)	mA	
Power consumption	DC 12V	-	0.36	30	TD100, TD160, TS100, TS160, TS250, TS400, TS630, TS800
	AC/DC 24V	0.58	0.58	24	
	AC/DC 48V	1.22	1.23	25	
	AC/DC 110~130V	1.36	1.37	10.5	
	AC 220~240V/DC250V	1.80	1.88	7.5	
	AC 380~500V	1.15	-	2.3	
Max.opening time (ms)		50			
Tightening torque of terminal screw		8.2kgf · cm			

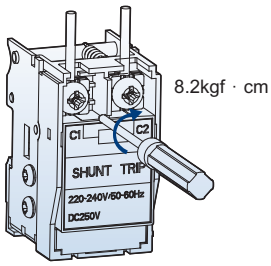

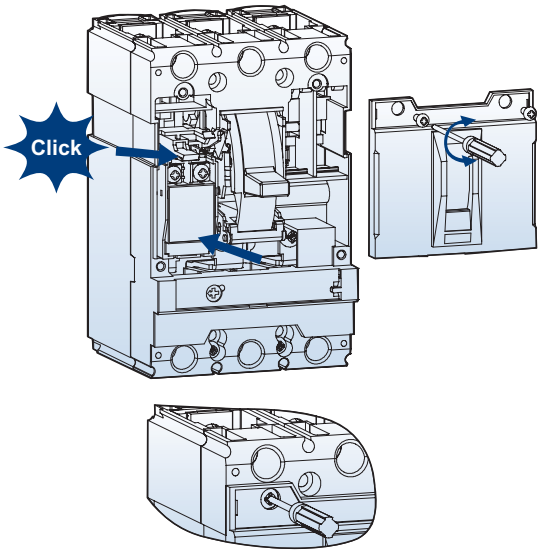

Electrical auxiliaries

Auxiliary switch (AX), Alarm switch (AL) and Fault alarm switch (FAL)

AX

Auxiliary switch (AX)

Auxiliary switch is for applications requiring remote “ON” and “OFF” indication.
Each switch contains two contacts having a common connection.
One is open and the other closed when the circuit breaker is open, and vice-versa.

Alarm switch (AL)

Alarm switches offer provisions for immediate audio or visual indication of a tripped breaker due to overload, short circuit, shunt trip, or undervoltage release conditions.
They are particularly useful in automated plants where operators must be signaled about changes in the electrical distribution system. This switch features a closed contact when the circuit breaker is tripped automatically. In other words, this switch does not function when the breaker is operated manually.
Its contact is open when the circuit breaker is reset.

AL

Fault alarm switch (FAL)

FAL Indicates that the breaker has tripped due to overload or short circuit.
And, it can be applied to only circuit breakers with electronic trip units.

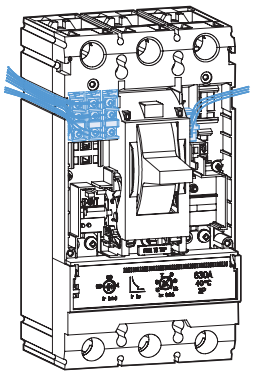

Contact operation

MCCB	ON OFF		TRIP
Position of AX	AXc1 — AXa1 / AXb1	AXc1 — AXa1 / AXb1	
Position of AL, FAL	AXc1 — AXa1 / AXb1		AXc1 — AXa1 / AXb1

Technical data

Conventional thermal current Ith	5A			TD100 TD160 TS100 TS160 TS250 TS400 TS630 TS800
Rated operational current Ie with rated operational voltage Ue	Voltage	Ie		
		Resistance	Inductance	
- Altemating current 50/60Hz AC	125V	5	3	
	250V	3	2	
	500V	-	-	
- Direct current DC	30V	4	3	
	125V	0.4	0.4	
	250V	0.2	0.2	

Electrical auxiliaries

Possible configuration of electrical auxiliaries

Maximum possibilities

Phase	Accessory	TD160	TS250	TS630	TS800
R (Left)	AX	-	1	3	3
	AL	1	1	-	-
	SHT or UVT	1	1	1	1
T (Right)	AX	2	1	-	-
	AL	-	-	1	2
	FAL	-	1	1	1

Note) FAL can be applied to only MCCB with electronic trip release.

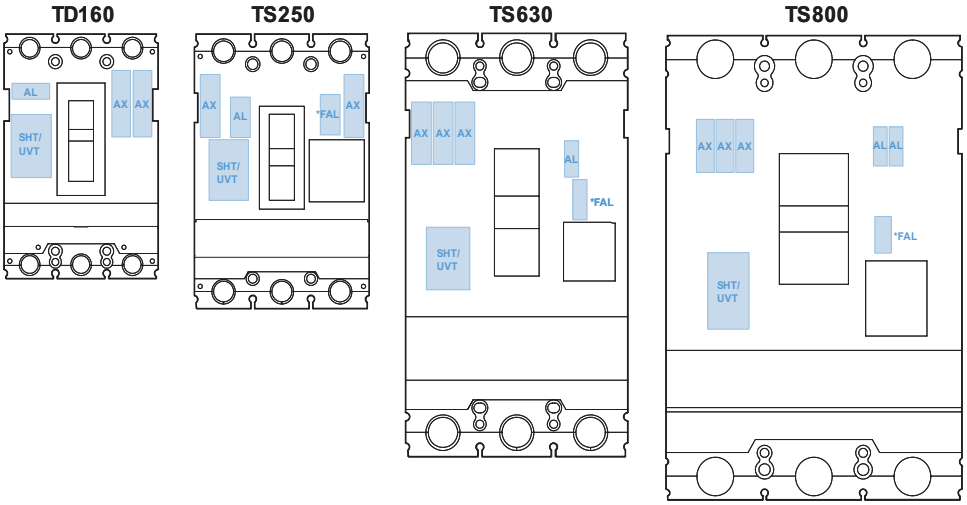

Rotary handles

Rotary handles

The rotary handle operating mechanism is available in either the direct version or in the extended version on the compartment door.
It is always fitted with a compartment door lock and on a request it can be supplied with a key lock in the open position.

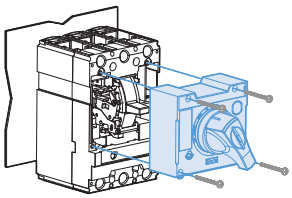

Direct rotary handles

Direct rotary handles

MCCB	Rotary handle
TD100,TD160 DH1	
TS100,TS160,TS250 DH2	
TS400,TS630 DH3	
TS800 DH4	

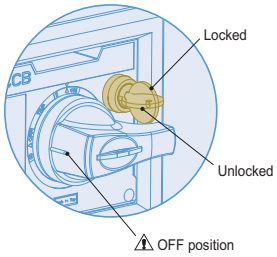

Direct rotary handle with a key lock

Direct rotary handles with a key lock

MCCB	Padlockable device	Lock function
TD100, TD160	DHK1	Lock in On or Off position
TS100, TS160, TS250	DHK2	
TS400, TS630	DHK3	
TS800 DHK4		

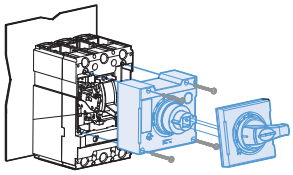

Extended rotary handles

Extended rotary handles

MCCB	Padlockable device
TD100,TD160 EH1	
TS100,TS160,TS250 EH2	
TS400,TS630 EH3	
TS800 EH4	

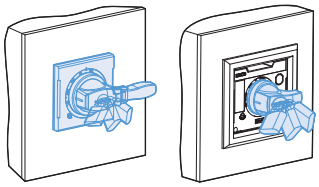

Padlocks for direct or extended handle

Padlocks can be used to lock the breaker in the ON or OFF position.

Rotary handles

Rotary handles

Degree of protections

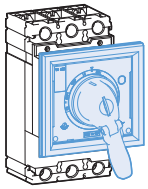

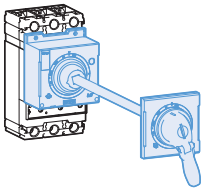

Type	Degree of protection	IP
Circuit breaker with cover frame and rotary direct handle	The access probe of 1.0mm diameter shall not penetrate.	IP40
Circuit breaker with cover frame and rotary extended handle	Totally protected against ingress of dust and water jets from any direction	IP65

Type suffix according to the mounting position

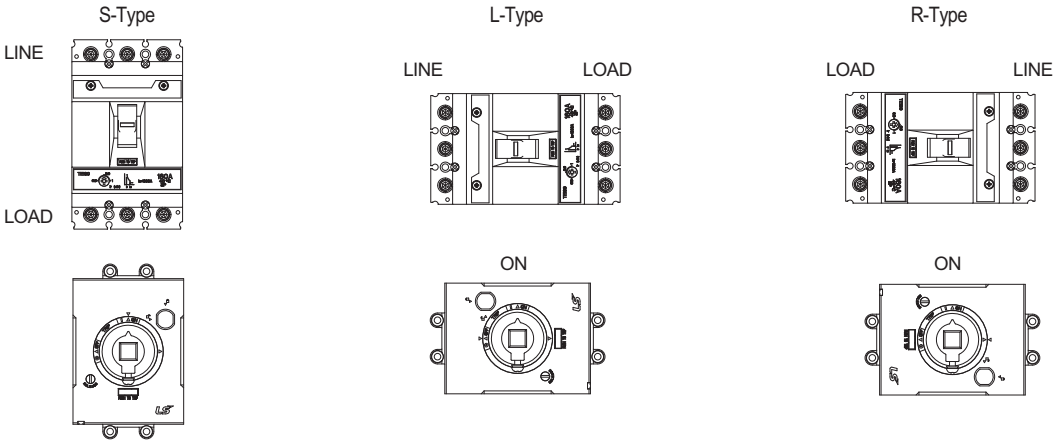

Locking devices

Removable locking device

Removable locking device is available for all TD & TS circuit breakers.
The locking device is designed to be easily attached to the circuit-breaker.

This device allows the handle to be locked in the “OFF” position.
Locking in the OFF position guarantee isolation according to IEC 60947-2.

The locking device for the toggle handle can be installed in 3-pole and 4-pole circuit-breakers.
Maximum three (3) padlocks with shackle diameters ranging from 5 to 8mm may be used.
(Padlocks are not supplied)

Removable locking device

MCCB	Padlockable device	Function
TD100,TD160 PL1		“OFF” position
TS100,TS160,TS250 PL2		
TS400,TS630 PL3		
TS800 PL4		

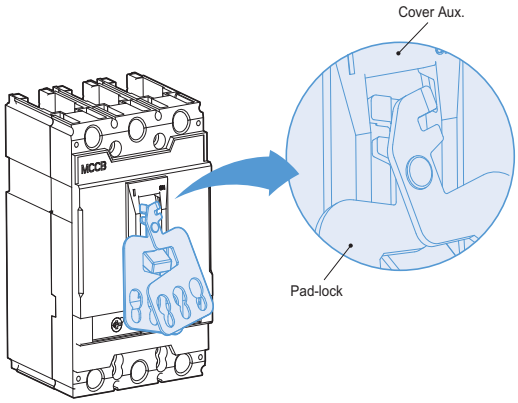

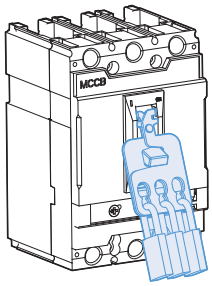

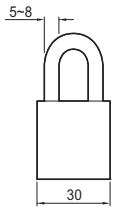

Padlock dimensions

Locking devices

Fixed locking device

Fixed locking device is available for all TD & TS circuit breakers.
This device allows the handle to be locked in the “ON” and “OFF” position.
Locking in the OFF position guarantee isolation according to IEC 60947-2.

The locking device for the toggle handle can be installed in 3-pole and 4-pole circuit-breakers.
Maximum three (3) padlocks with shackle diameters ranging from 5 to 8mm may be used.
(Padlocks are not supplied)

Fixed locking device

MCCB	Padlockable device	Function
TD100,TD160 PHL1		Lock in Off or On position
TS100,TS160,TS250 PHL2		
TS400,TS630 PHL3		
TS800 PHL4		

How to use

The locking device for the toggle handle is designed to be easily attached to the front of circuit-breaker.
① Please set the toggle handle in the position of ”On” or ”Off”.
② Install the lock device onto the front of auxiliary cover of circuit breaker.
③ Folding the wings of lock device as shown in picture 3.
④ The padlock to be used shall be that which is commercially available with the nominal dimension. (30mm nominal dimension, 5~8mm diameter)

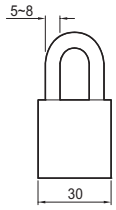

Padlock dimensions

TD100, 160	① 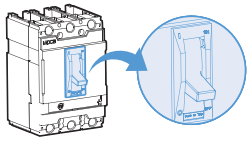	② 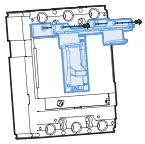
	③ 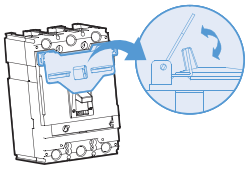	④ 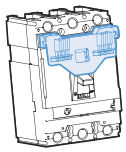
TS100 ~ TS800	① 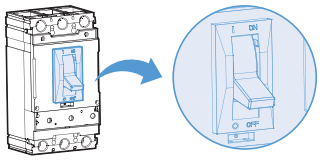	② 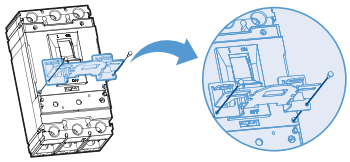
	③ 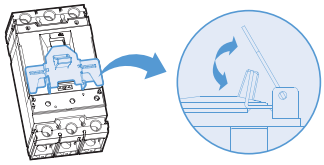	④ 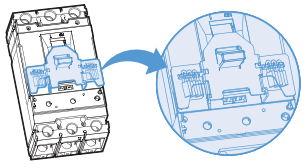

Locking devices

Locking by rotary handle with a key lock

A locking can be done by using the rotary handle which has key lock device.
The lock is used to lock the circuit-breaker in the OFF position.

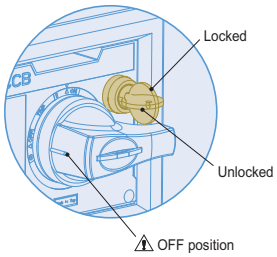

Locking by rotary handle with a key lock

MCCB	Padlockable device	Function
TD100,TD160 DHK1		Lock in Off position
TS100,TS160,TS250 DHK2		
TS400,TS630 DHK3		
TS800 DHK4		

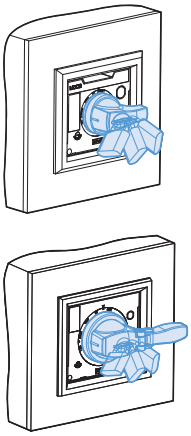

Padlocking by rotary handle

A padlocking can be also done by using the rotary handle.
The lock is used to lock the circuit-breaker in the ON and OFF position.
Maximum three (3) padlocks with shackle diameters ranging from 5 to 8mm may be used.
(Padlocks are not supplied)

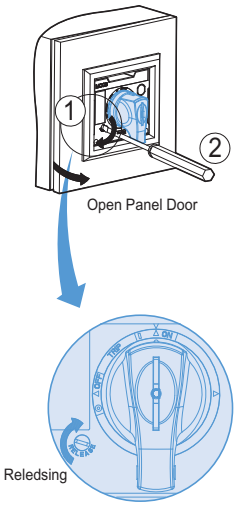

Releasing panel door lock at ON position

The panel door can be locked at ON and TRIP position of rotary handle.
To open the panel door at ON position, just rotate release screw clockwise.

Terminals

Front connection

Terminal mounter

- It is supplied with Susol MCCBs as an standard part of circuit breaker.
- Connecting part with terminal for bus bar, cable with lug

MCCB	Type
TD100,TD160 TM1	
TS100,TS160,TS250 TM2	
TS400,TS630 -	
TS800 -	

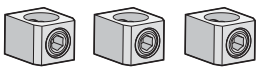

Inner box terminal

- Bare cable connectors for Susol TD and TS series circuit breakers
- Can be used for both aluminum and copper cables

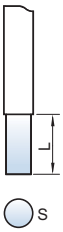

Applicable to	Type	Pole	Set quantity	Cable connection possibilities	Conductor size	
TD100, 160	SBT13 SBT14	3 4	1 Set (3EA) 1 Set (4EA)	1	L(mm)	21
					S(mm²)Cu/Al	2.5~95
					Tightening torque (kgf · cm)	120~147
TS100, 160, 250	SBT23 SBT24	3 4	1 Set (3EA) 1 Set (4EA)	1	L(mm)	21
					S(mm²)Cu/Al	10~150
					Tightening torque (kgf · cm)	120~147
TS400, 630	Note1) IBT33 IBT34	3 4	1 Set (3EA) 1 Set (4EA)	1	L(mm) 30	
					S(mm²)Cu/Al 70~300	
					Tightening torque (kgf · cm)	367~428
PB12, 13	Note2) IBT13	3	1 Set (3EA)	1	L(mm)	18
					S(mm²)Cu/Al	2.5~95
					Tightening torque (kgf · cm)	306
PB22, 23	Note2) IBT23	3	1 Set (3EA)	1	L(mm)	21
					S(mm²)Cu/Al	10~150
					Tightening torque (kgf · cm)	306

Note) 1. IBT3 for TS630 can be applied in case that rate current is upto 400A.
2. IBT13, 23 are for Plug-in base.

SBT13, 14

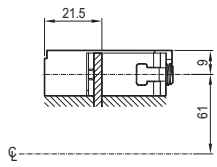

SBT23, 24

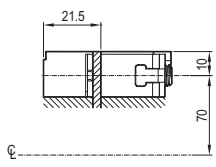

IBT33, 34(TS400)

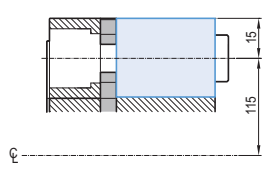

Terminals

Front connection

Extended box terminals (Copper cables/bars and aluminum cables)

- The extended box terminals for TD and TS circuit breakers can be used for cooper cables/bars and aluminum cables. There are four (4) kinds of terminals.
- For TD100, TD160: 1-cable connector (EBT13, EBT14)
- For TS100, TS160, TS250: 1-cable connector (EBT23, EBT24)
- For TS400, TS630: 2-cable connector (EBT33, EBT34)
- For TS800: 3-cable connector (EBT43, EBT44)

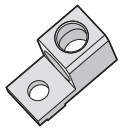

1-cable connector

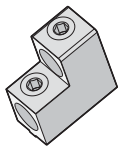

2-cable connector

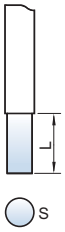

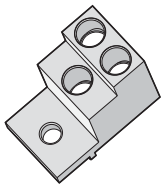

3-cable connector

Applicable to	Type	Pole	Set quantity	Cable connection possibilities	Conductor size	
TD100, 160	EBT13 EBT14	3 4	1 Set (3EA) 1 Set (4EA)	1	L(mm)	20
					S(mm²)Cu/Al	2.5~95
					Tightening torque (kgf · cm)	306
TS100, 160, 250	EBT23 EBT24	3 4	1 Set (3EA) 1 Set (4EA)	1	L(mm)	24
					S(mm²)Cu/Al	10~150
					Tightening torque (kgf · cm)	306
TS400, 630	EBT33 EBT34	3 4	1 Set (3EA) 1 Set (4EA)	2	L(mm)	33 or 62
					S(mm²)Cu/Al	2×85 to 2×240
					Tightening torque (kgf · cm)	367~428
TS800	EBT43 EBT44	3 4	1 Set (3EA) 1 Set (4EA)	3	L(mm) 25~48	
					S(mm²)Cu/Al	3×85 to 3×240
					Tightening torque (kgf · cm)	367~428

EBT13, 14

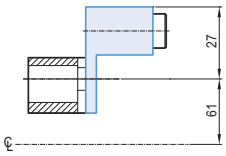

EBT23, 24

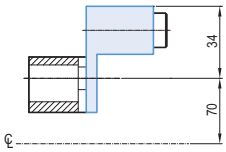

EBT33, 34

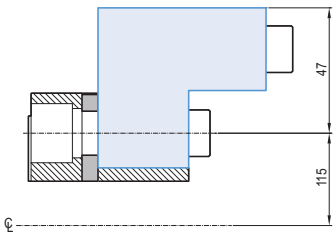

EBT43, 44

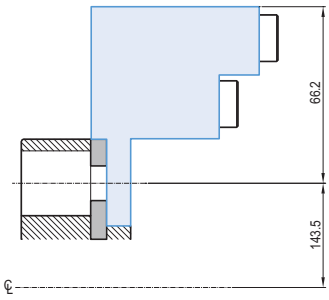

Terminals

Front connection

Spreaders

- As an optional part of circuit breaker
- Can increase the pitch of the terminals

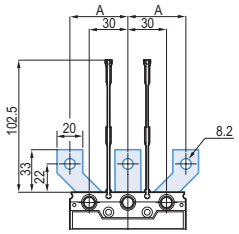

TD100, 160 3P

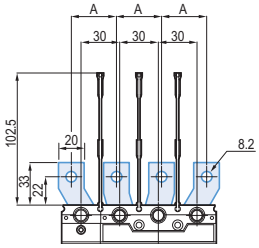

TD100, 160 4P

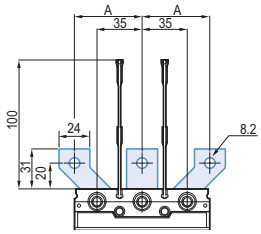

TS100, 160, 250 3P

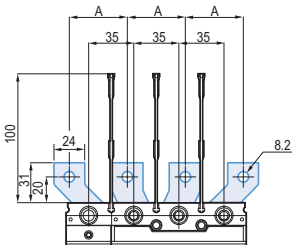

TS100, 160, 250 4P

MCCB	Pole	Type	Size A (mm)	Feature
TD100, TD160	2P	SP12a	35	
	3P	SP13a		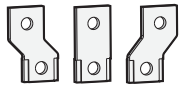
	4P	SP14a		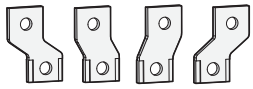
	2P	SP12b	45	
	3P	SP13b		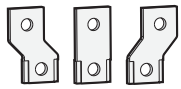
	4P	SP14b		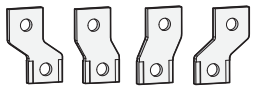
TS100, TS160, TS250	2P	SP22a	45	
	3P	SP23a		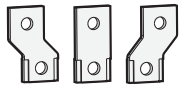
	4P	SP24a		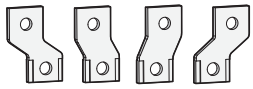
	2P	SP22b	52.5	
	3P	SP23b		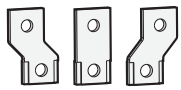
	4P	SP24b		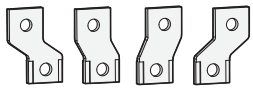

Terminals

Front connection

Spreaders

- As an optional part of circuit breaker
- Can increase the pitch of the terminals

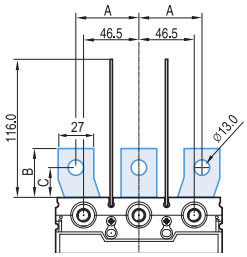

TS400, 630 3P

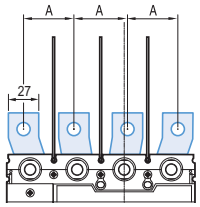

TS400, 630 4P

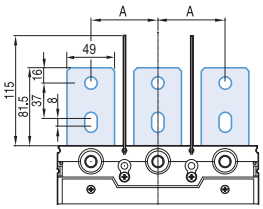

TS800 3P

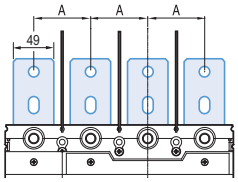

TS800 4P

MCCB	Pole	Type	Size(mm)			Feature
			A	B	C	
TS400, TS630	2P	SP32a	52.5	41	25	
	3P	SP33a				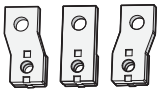
	4P	SP34a				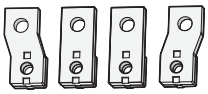
	2P	SP32b	70	54	38	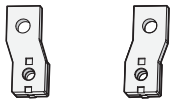
	3P	SP33b				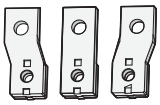
	4P	SP34b				
	2P	SPS32	46.5	41	25	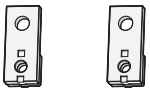
	3P	SPS33				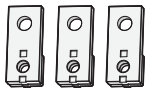
	4P	SPS34				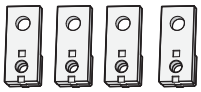
TS800	2P	SPS42	70	81.5		
	3P	SPS43				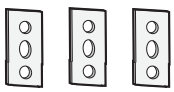
	4P	SPS44				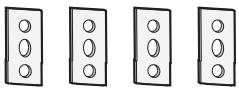

Terminals

Rear connection

Rear connection terminals are used to adapt Susol TD and TS circuit breakers to switchboards or other applications that require rear connection.
These can be connected directly to circuit breakers without any modification

There are two kinds of rear connection terminals.
- Flat type
- Round type

Flat type

Flat vertical terminals

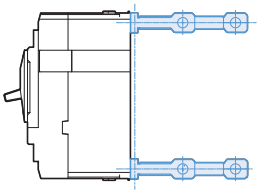

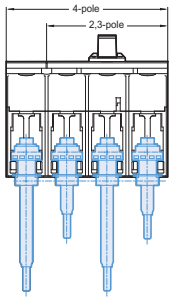

Flat type

MCCB	2-pole 3-pole		4-pole
TD100,TD160 RTB12		RTB13	RTB14
TS100,TS160,TS250 RTB22		RTB23	RTB24
TS400,TS630 RTB32		RTB33	RTB34
TS800 RTB42		RTB43	RTB44

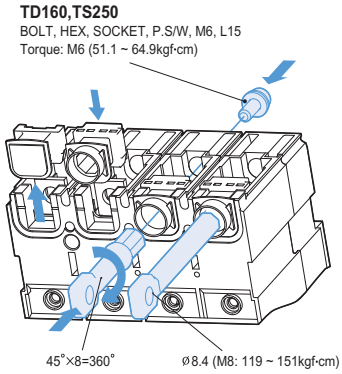

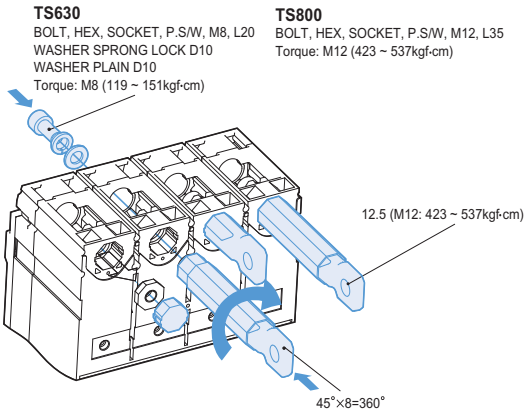

Round type

Round threaded terminals

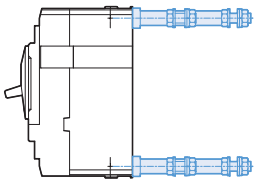

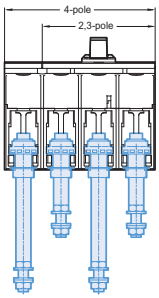

Round type

MCCB	2-pole 3-pole 4-pole		
TD100,TD160 RTR12		RTR13	RTR14
TS100,TS160,TS250 RTR22		RTR23	RTR24
TS400,TS630 -		-	-
TS800 -		-	-

Insulation

Short type covers

Long type covers

Insulation by terminal cover

Insulation terminal cover

The terminal covers are applied to the circuit-breaker to prevent accidental contact with live parts and thereby guarantee protection against direct contacts.

Two types by length are available:

Short type covers, ITS
- IP40 degree of protection
- For fixed circuit-breakers with rear terminals and for moving parts of plug-in

Long type covers, ITL
- IP40 degree of protection
- For fixed circuit-breakers with front, front extended, front for cables terminals.

MCCB Terminal		cover	
Frame type	Pole	Long type	Short type
TD100,TD160	2P (1) , 3-pole	ITL13	ITS13
	4-pole ITL14		ITS14
TS100,TS160,TS250	2P (1), 3-pole	ITL23	ITS23
	4-pole	ITL24 ITS24	
TS400,TS630	2P (1), 3-pole	ITL33	ITS33
	4-pole ITL34		ITS34
TS800	2P (1), 3-pole	ITL43	ITS43
	4-pole ITL44		ITS44

Note) (1) 2P in 3pole mold case

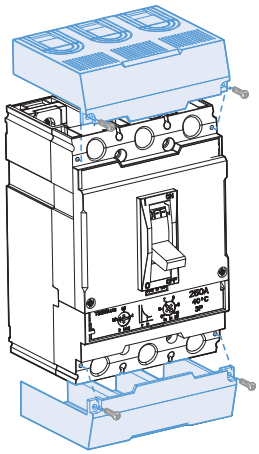

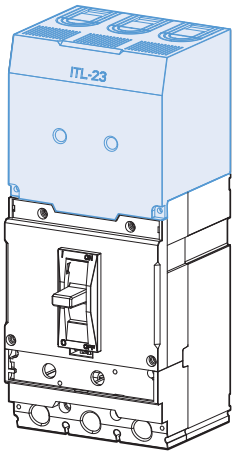

Insulation

Insulation by barrier

These allow the insulation characteristics between the phases at the connections to be increased.
They are mounted from the front, even with the circuit-breaker already installed, inserting them into the corresponding slots.
They are incompatible with both the insulating terminal covers.
It is possible to mount the phase separating partitions between two circuit-breakers side by side.

Insulation barriers

Type	Applied MCCB	Set quantity
B-23C	TD100, TD160	4pcs
	TS100, TS160, TS250	4pcs
B-33C	TS400, TS630	4pcs
B-43C TS800		4pcs

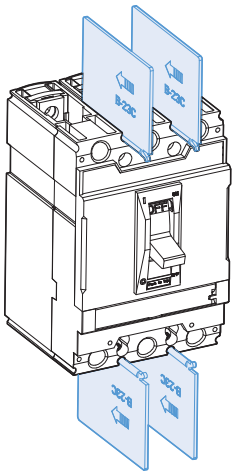

Interlock

Mechanical Interlock
(Padlocks are not supplied)

Mechanical interlocking device

The mechanical interlock (MIT) can be applied on the front of two breakers mounted side by side, in either the 3-pole or 4-pole version and prevents simultaneous closing of the two breakers.

Fixing is carried out directly on the cover of the breakers.

The front interlocking plate allows installation of a padlock in order to fix the position. (possibility of locking in the O-O position as well)

This mechanical interlocking device is very useful and simple for consisting of manual source-changeover system.

Operation

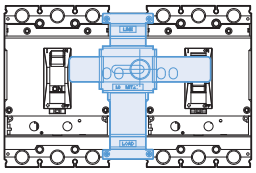

Left MCCB: ON/OFF is possible
Right MCCB: Off lock

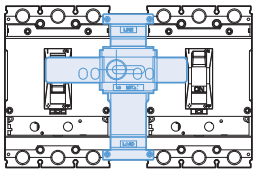

Left MCCB: Off lock
Right MCCB: ON/OFF is possible

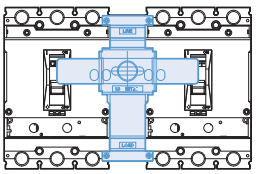

Both MCCBs are of locked

MCCB		Interlock
Frame type	Pole	
TD100,TD160	3-pole MIT13	
	4-pole MIT14	
TS100,TS160,TS250	3-pole MIT23	
	4-pole MIT24	
TS400,TS630	3-pole MIT33	
	4-pole MIT34	
TS800	3-pole MIT43	
	4-pole MIT44	

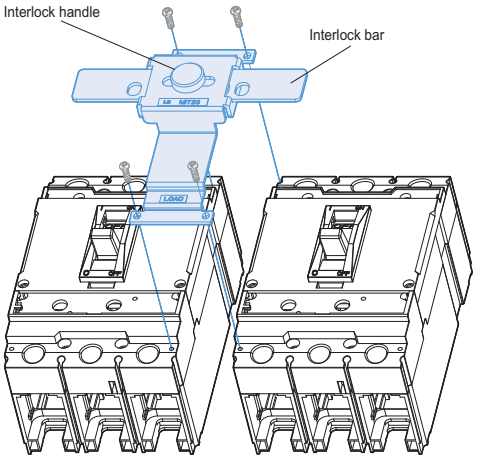

Plug-in device

Plug-in device

The plug-in base is the fixed part of the plug-in version of the circuit-breaker.
It will be installed directly on the back plate of panel.
The circuit-breaker is racked out by unscrewing the top and bottom fixing screws.
Plug-in base makes it possible to extract and/or rapidly replace the circuit breaker without having to touch connections for ship and important installations.

MCCB	Pole	Arrangement	Type Means	
TD100, TD160	2	Single line	PB12	
	3	Single line	PB13	
	2	Double line	PB12D2	For distribution board
	3	Double line	PB13D2	For distribution board
TS100, TS160, TS250	2	Single line	PB22	
	3	Single line	PB23	
TS400, TS600	2	Single line	PB32	
	3	Single line	PB33	
TS800	2	Single line	PB42	
	3	Single line	PB43	

Front connection

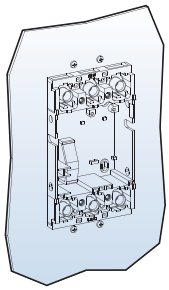

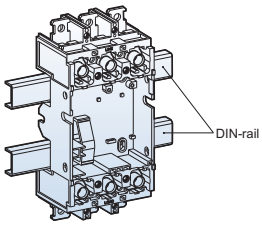

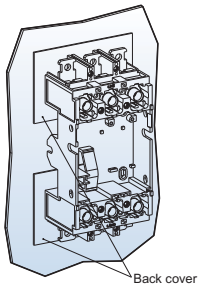

Rear connection

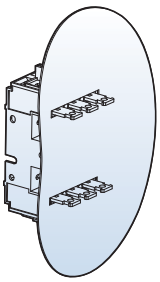

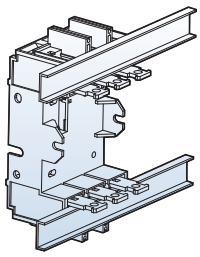

Plug-in system

Normal type Plug-in MCCB: PB□ type

- MCCB rating: TD100~TS800
- generally used in switchgears

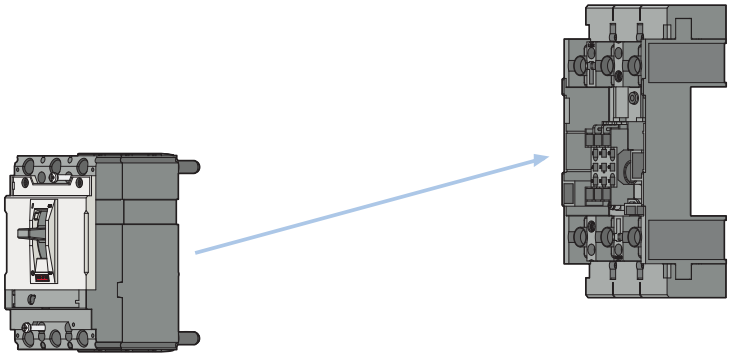

Double-row type Plug-in MCCB: PB□ D2 type

- MCCB rating: TD100, 160
- generally used in branch circuits

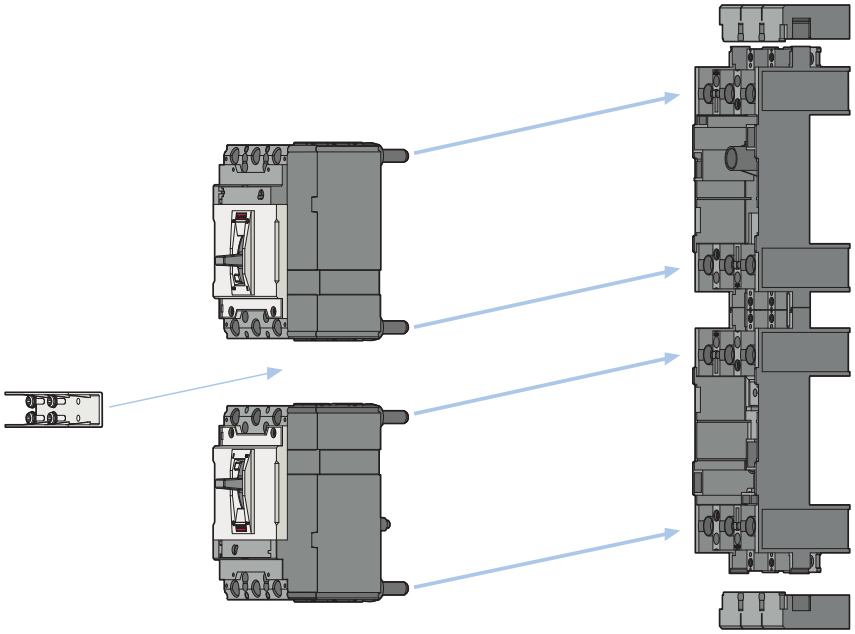

Plug-in device

Assembling procedure

TD100, TD160

1. Conversion to Plug-in MCCB

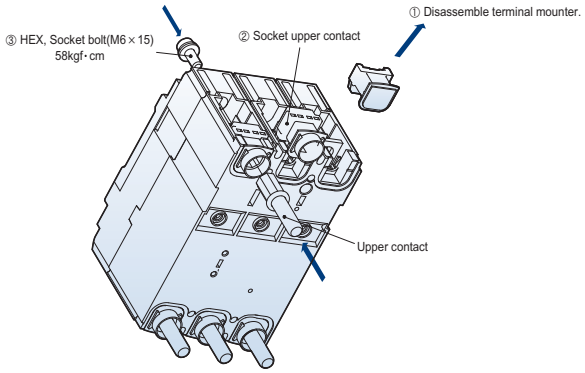

2. Assembling safety device

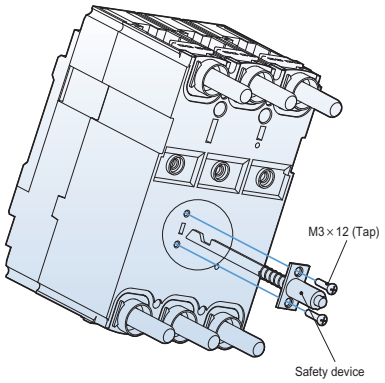

3. Assembling MCCB and plug-in device

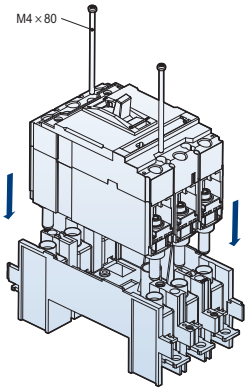

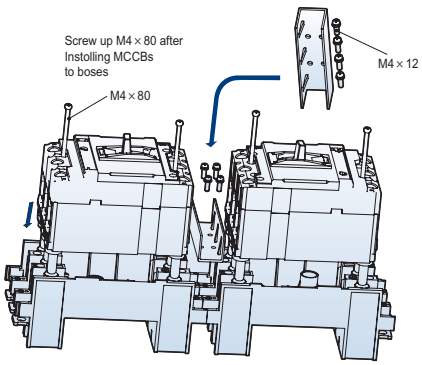

Plug-in device

Assembling procedure

TS100, TS160, TS250

1. Conversion to Plug-in MCCB

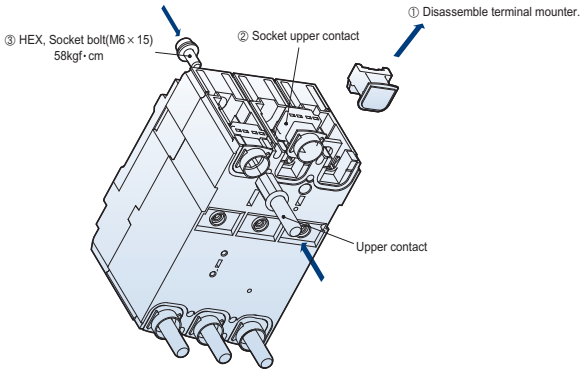

2. Assembling safety device

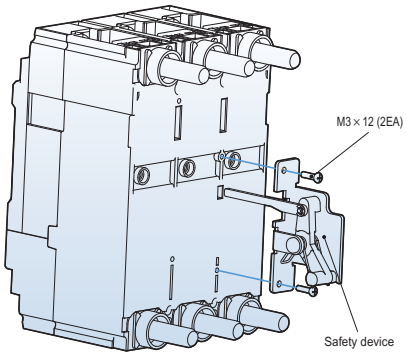

3. Assembling MCCB and plug-in device

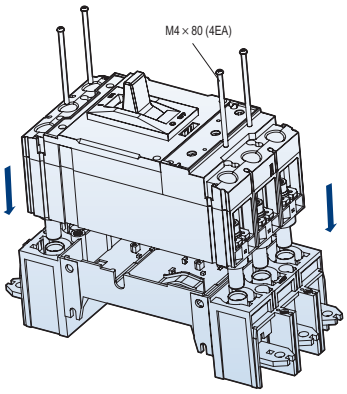

Plug-in device

Assembling procedure

TS400, TS630	TS800

1. Conversion to Plug-in MCCB

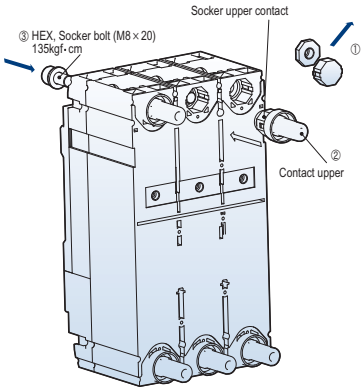

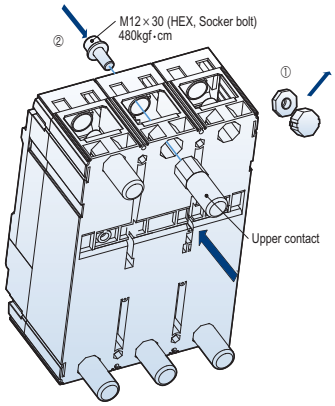

2. Assembling safety device

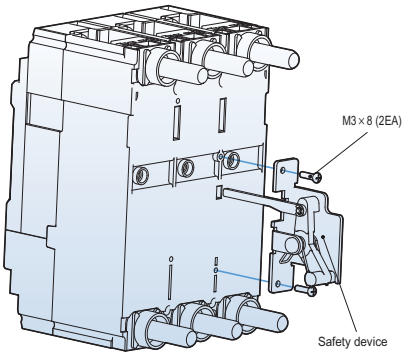

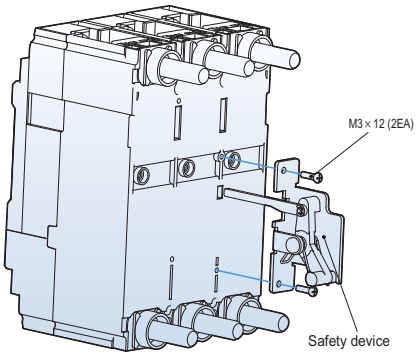

3. Assembling MCCB and plug-in device

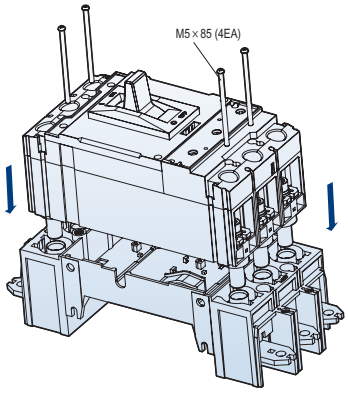

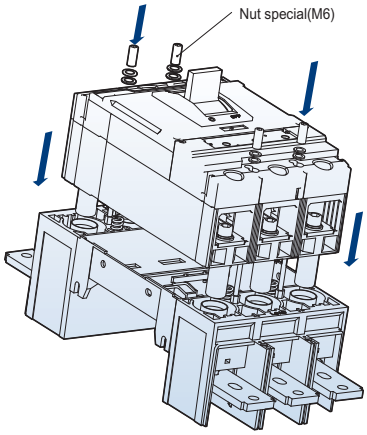

Connector KIT

Electric auxilialy circuit(AX, AL, SHT, UVT) from Breaker via one to three connector KIT(nine wires each). These are made of moving part on Breaker and fixed part on plug-in base up to 800AF.

Breaker Max.	Q'ty	Fixed part	Moving part
TD160 1		SPARE PART ASS'Y, CONNECTOR KIT,TD160	SPARE PART ASS'Y, BASE CONNECTOR,TD160
TS250 2		SPARE PART ASS'Y, CONNECTOR KIT,TS250	SPARE PART ASS'Y, BASE CONNECTOR,TS250
TS400/630 3		SPARE PART ASS'Y, CONNECTOR KIT,TS400/630	SPARE PART ASS'Y, BASE CONNECTOR,TS630
TS800 3		SPARE PART ASS'Y, CONNECTOR KIT,TS800	SPARE PART ASS'Y, BASE CONNECTOR,TS800

TD160

Moving part

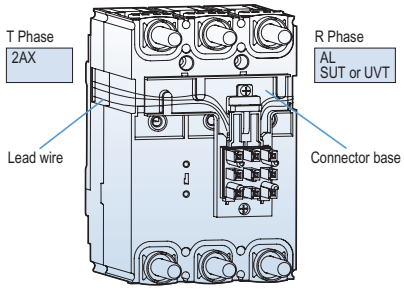

Fixed part

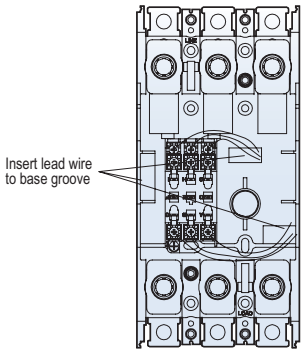

TS250

Moving part

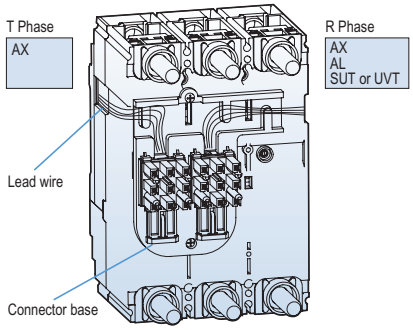

Fixed part

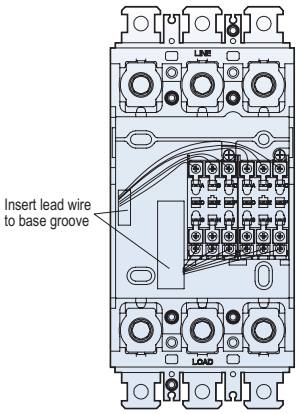

Connector KIT

TS400/630

Moving part

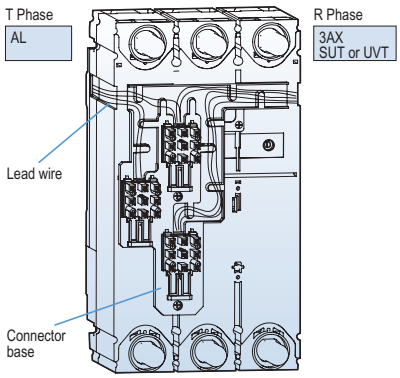

Fixed part

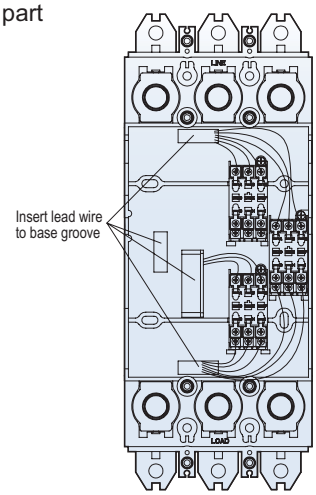

TS800

Moving part

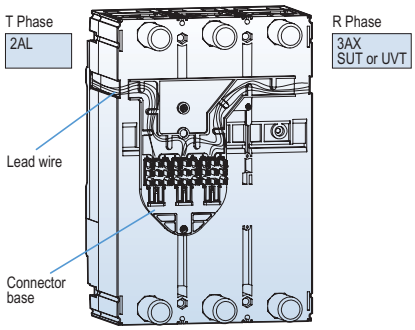

Fixed part

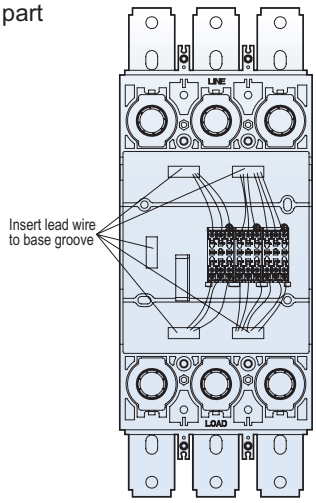

Read wire color

Moving part

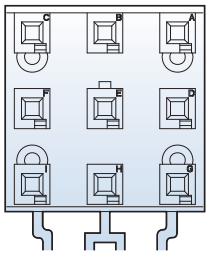

Lead wire color

A: Red	B: White	C: Black
D: Blue	E: Yellow	F: Green
G: Gray	H: Orange	I: Brown

Note) Useless lead wires should be ended for Preventing an electric accident.

Fixed part

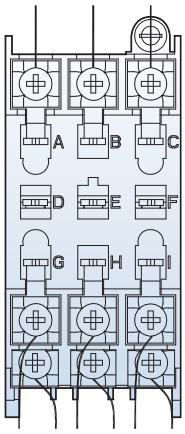

Lead wire color

A: Red	B: White	C: Black
D: Blue	E: Yellow	F: Green
G: Gray	H: Orange	I: Brown

Note) Useless lead wires should be ended for Preventing an electric accident.
- To connent AL and FAL solder the wire and insulates the wire

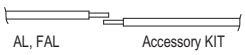

Remote operation

TS250 + MOP2

Motor operator

Motor operators can also be operated by manual.The motor drives a mechanism which switches TD & TS toggle handle to the “ON” and “OFF/RESET” positions.
- The manual actuator handle is located on the front of the cover.
- Manual or Automatic operation can be selected.
- Applicable to 2, 3 and 4-pole breakers.

The motor operator is an essential device for constructing a remote operated automatic source-changeover system to ensure a continuous supply of electrical power at following certain installations:
- Commercial sector: Hospital, Tall building, Bank, Insurance companies, Shopping centers
- Industry: Ships, Assembly lines at plant, Military sites, Port and Railway installation

MCCB	Type	Control voltage	Actuation current (A)	Response time (ms)		Consumption (W)	Mechanical service life (operations)	No. of operations per hour
				Closing	Opening			
TD100, TD160	MOP1	① DC 24V ② AC 100~240V/ DC 100~220V	≤2.5A (DC 24V) ≤0.5A (AC)	310	200	14	25,000	120
TS100, TS160, TS250	MOP2	① DC 24V ② AC 100~110V/ DC 110V ③ AC 230/ DC 220V	≤5A (DC 24V) ≤2A (AC)	350	230	14	25,000	120
TS400,TS 630	MOP3			500	350	35	20,000	60
TS800	MOP4			700	420	35	10,000	20

Wiring connection

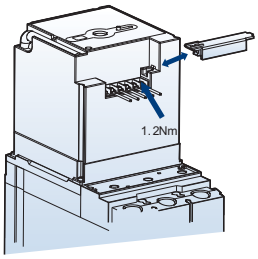

Standard connection

Circuit breaker On and Off controlled by remote operation and manual operation

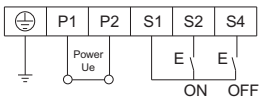

Connection with alarm switch (AL)

1) The below connection diagram is the method of using a alarm switch (AL) without shunt or undervoltage trip.
2) After clearing the fault surely, manual reset is mandatory in case of tripping due to an electrical fault.

Connection with FAL (only for the breakers with electronic trip unit ETS or ETM)

1) The below connection diagram is the method of using a FAL for circuit breakers with electronic trip unit.
2) After clearing the fault surely, manual reset is mandatory in case of tripping due to an electrical fault.

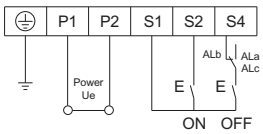

Remote operation

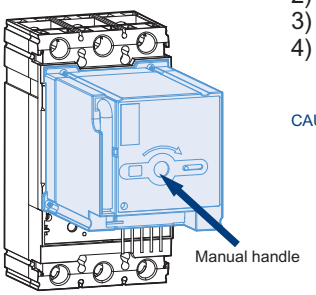

Manual operation

1) Insert the manual handle into the slot of Motor Operator surface and rotate it clockwise.
2) It must be rotated just 180° clockwise for safe operation of micro switch in the motor operator.
3) Return the manual handle after the manual operation
4) Turn the slide switch back to the position of AUTO.

CAUTION: When the circuit breaker is tripped by trip button in the OFF status,
it is impossible to operate motor operator automatically It must be reset by manual operation.

Automatic operation

1) Set the slide switch to AUTO, then internal power is closed automatically.
2) Operating frequency should be less than these below regulated values.
   TD 160N/H/L, TS250N/H/L:180 operations per hour
3) Use the ON/OFF switch in the range of regulated values.
4) It may interfere near communication equipments because of internal switching power supply.
   It's recommended that a noise filter be installed to power supply.
5) Please do not input ON/OFF signals at the same time during the automatic operation.
6) If the circuit breaker has a UVT attached inside, charge a UVT on the rated voltage before performing MOTOR OPERATOR.

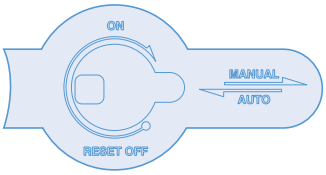

[TD100, 160, TS100, 160, 250]

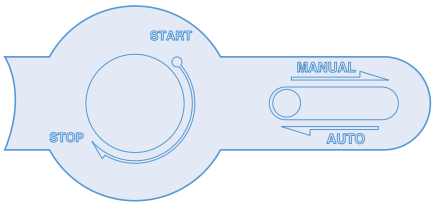

[TS400, 630, 800]

Remote operation

Motor operator

Feature

① On position indication (Red color)
② Trip position indication (White color)
③ Off position indication (Green color)
④ Button for push to trip
(available for only for TD160AF and TS630AF)
⑤ On/Off/Reset selection lever
⑥ Manual/Auto selection lever

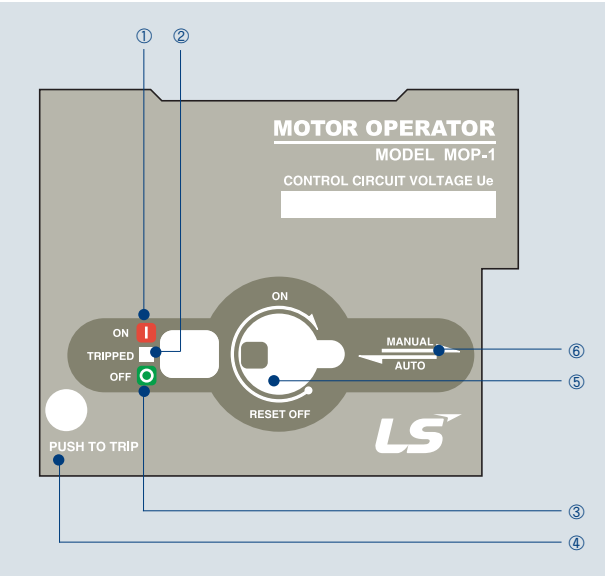

TD160 .... MOP-1

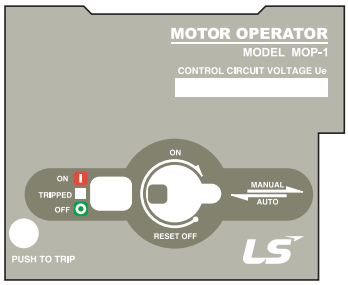

TS250 .... MOP-2

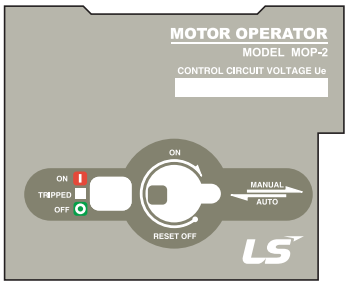

TS630.... MOP-3

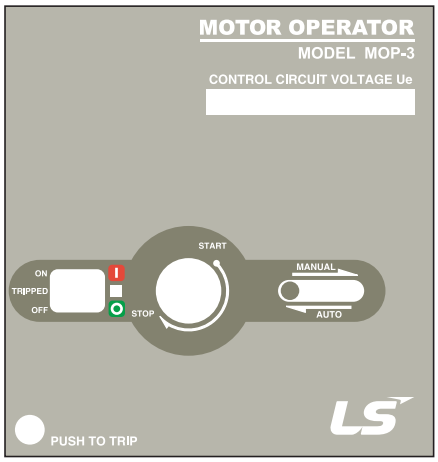

TS800 .... MOP-4

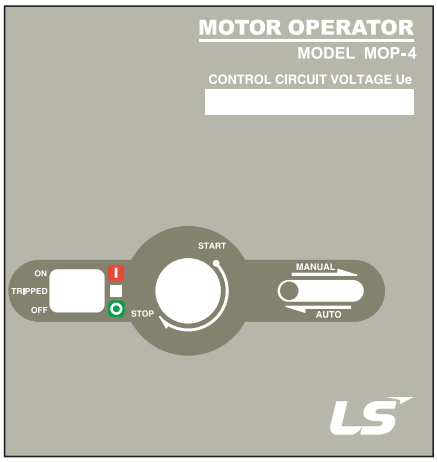

Residual Current Devices (RCD)

The Susol circuit breaker can offer protection against earth leakage currents by using an add-on residual current device (RCD). In particular, the TS100, TS160 and TS250 circuit breakers can be combined with the RTU23 of residual current device, the TS400 and TS600 circuit breakers can be combined with the RTU33 of residual current device and the TS800 circuit breaker can be combined with the RTU43 of residual current device. In all cases the RCD unit interfaces directly below the circuit breaker trip unit area without the use of any secondary wiring or connections.

The Susol circuit breaker and an RCD unit combination can be connected like any stand-alone breaker and are available as fixed or plug-in devices. The main connection interface of the RCD is an exact replacement of the breaker connection area, thus allowing the use of all standard breaker terminals.

Overview

Apart from the protection against overloads typical of automatic circuit breakers, the residual current circuit breaker derived from them also guarantee protection of people against earth leakage currents, thereby ensuring protection against direct contacts, indirect contacts and fire hazards.-(ELCB)

The RCD unit has numerous current and time settings and an override blocking the time settings when set to 30mA. The earth leakage test button tests the electrical and mechanical operation of the device. In order to allow for a dielectric test of the breaker and RCD combination without damaging the electronics, the dielectric plug is placed within the setting area. The RCD unit may be equipped with an alarm switch (FAL) to remotely indicate tripping due to an earth leakage current.

Compliance with standards :

- IEC 60947-2 (industrial), Appendix B
- IEC 61009 (residential)
- IEC 60755, class A, immunity to DC components up to 6mA
- VDE664, operation down to -25°C

Remote indications :

RCD unit may be equipped with an alarm contact (FAL-fault alarm switch) to remotely indicate tripping due to an earth leakage current.

Power supply :

RCD unit are self-supplied internally by the distribution-system voltage and therefore do not require any external source. They continue to function even when supplied by only two phases.

Residual Current Devices (RCD)

Configuration

- Intermediate terminal shield
- Sealable fixing screw for the intermediate terminal
- Dielectric plug(1)
  - Lift this plug before the dielectric test
- Test push-button
- Reset push-button
- Sealable fixing screw for
- Trip time delay settings(2)
- Sensitivity settings
- Slot for FAL auxiliary switch (optional)
- Sealing point for plate blocking access to the settings
- Rating plate

- If the sensitivity is set to 30 mA, there is no time delay. Whatever the time-delay setting.

Detail of Rating plate

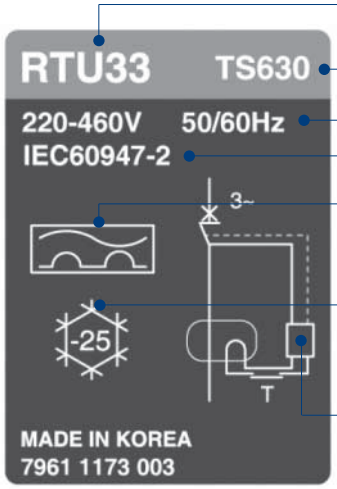

- Type of RCD
- Applicable circuit breaker
- Operational voltage and frequency
- Compliance with standards
- Standardized symbols :
  - Class A immunity to DC components (6mA insensitivity)
- Minimum operating temperature as per VDE664
- Schematic diagram

Residual Current Devices (RCD)

Ratings and Selection

RCD type		RTU23	RTU33	RTU43
Number of poles		3*	3*	3*
Applicable circuit breaker	TS100	■		
	TS160	■		
	TS250	■		
	TS400		■	
	TS630		■	
	TS800			■
Protection characteristics				
Sensitivity I	△n(A)	(adjustable) 0.03-0.3-1-3-10	(adjustable) 0.03-0.3-1-3-10	(adjustable) 0.03-0.3-1-3-10
Time delay **	Intentional time delay(ms)	(adjustable) 0-60-150-300-600	(adjustable) 0-60-150-300-600	(adjustable) 0-60-150-300-600
	Max. breaking time(ms)	(adjustable) 40-140-240-450-880	(adjustable) 40-140-240-450-880	(adjustable) 40-140-240-450-880
Rated voltage	AC 50/60 Hz	220~460V / 460~690V	220~460V / 460~690V	220~460V / 460~690V

Note 1) RTU can not be applied to 63A or less MTU Type MCCB.
2) RTU can not be applied to MCCB (Electronic trip unit) + D/E-Handle
* 3P modules may also be used on 2P circuit breakers.
** If the sensitivity is set to 30mA, the time delay setting is reduced to zero.

Trip time delay settings
0-60-150-300-600ms

Sensitivity settings, I△n
0.03-0.3-1-3-10A

Residual Current Devices (RCD)

Combination

The addition of the RCD unit does not affect circuit breaker characteristics.

- Conformity with standards
- Protection degrees, class II insulation front face
- Suitability for isolation as defined by IEC 60947-2
- Electrical characteristics
- Trip unit characteristics
- Installation and connection methods
- Indication, measurement and control accessories
- Installation and connection accessories

		RTU23	RTU33 RTU43	
MCCB 105	×H×D(mm)	×160×86 140	×260×110 210	×320×135
MCCB+RCD L		105×240×86 140	×370×110 210	×450×135
RCD 105		×80×86 140	×110×110 210	×130×135
MCCB+RCD	Weight(kg)	2.7 8.08		16.28
RCD		0.96 2.52		4.6
Type		Bottom		
Accessory		FAL(fault alarm switch)		

Standard accessories

The following accessories for mounting, connection, insulation, handle operation are standard items and are packed with Susol TD & TS series circuit breakers.

TD100N/H/L TD160N/H/L	 M8×20	 M3×75(1P) M4×75		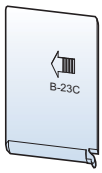 	
	1P: 2pcs 3P: 6pcs 4P: 8pcs	1P: 2pcs 3P: 2pcs 4P: 4pcs		3P: 4pcs 4P: 6pcs	
TS100N/H/L TS160N/H/L TS250N/H/L	 M8×20	 M4×75		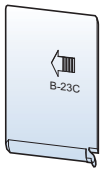 	
	3P: 6pcs 4P: 8pcs	3P: 2pcs 4P: 4pcs		3P: 4pcs 4P: 6pcs	
TS400N/H/L TS630N/H/L	 M10×30	 M5×85	 M5	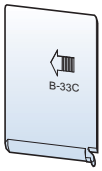 	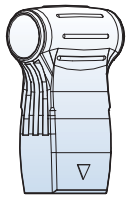
	3P: 6pcs 4P: 8pcs	3P: 4pcs 4P: 4pcs	3P: 4pcs 4P: 4pcs	3P: 4pcs 4P: 6pcs	“1pc* ”
TS800N/H/L	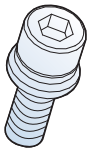 M12×35	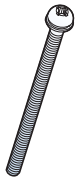 M6×100	 M6	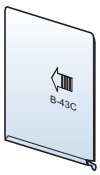 	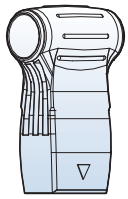
	3P: 6pcs 4P: 8pcs	3P: 4pcs 4P: 4pcs	3P: 4pcs 4P: 4pcs	3P: 4pcs 4P: 6pcs	“1pc* ”

* Auxiliary operating handel : TS400, TS630, TS800N/H/L Only

TS 1000 to 1600AF Electrical and mechanical accessories

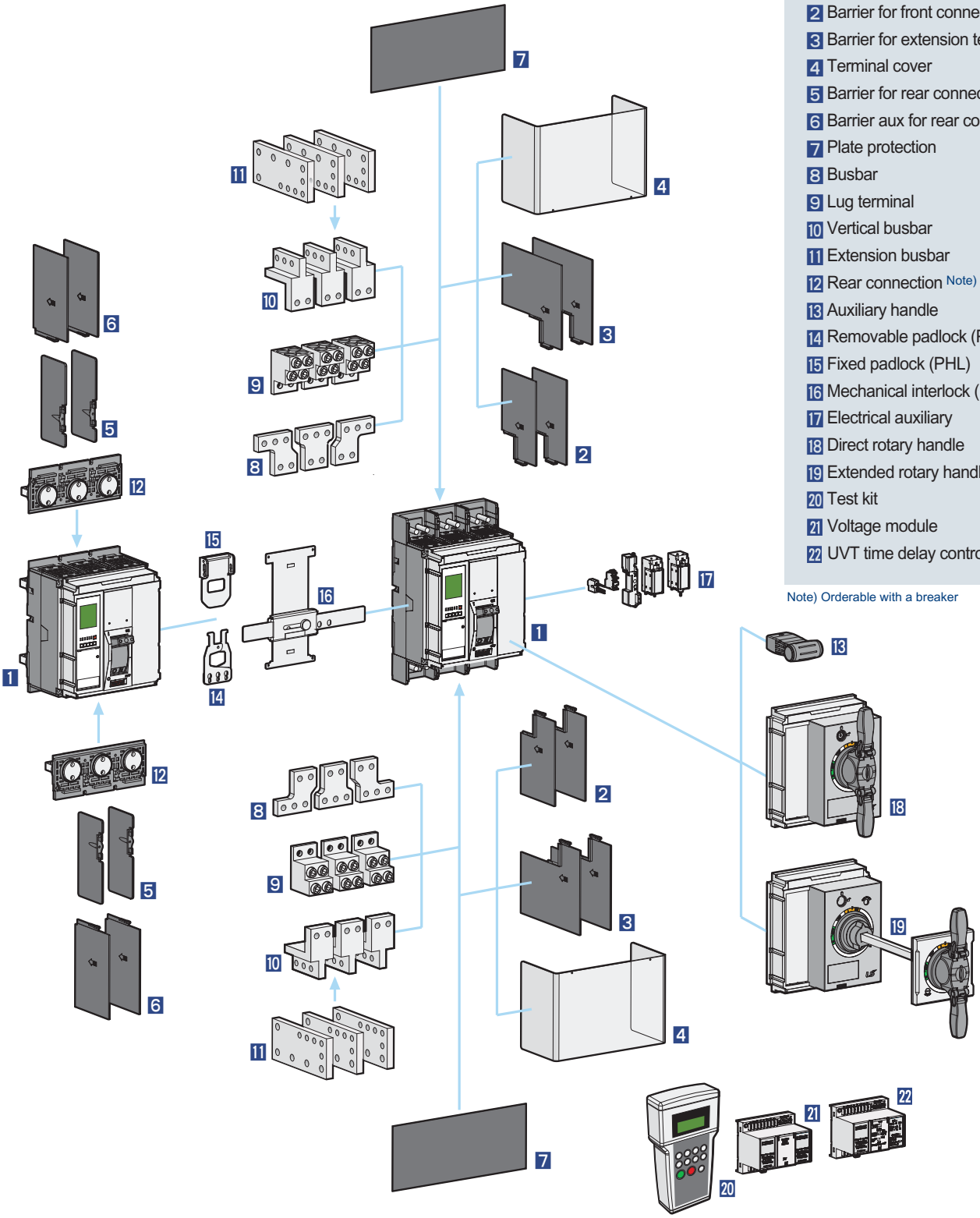

1 MCCB
2 Barrier for front connection
3 Barrier for extension terminal
4 Terminal cover
5 Barrier for rear connection
6 Barrier aux for rear connection
7 Plate protection
8 Busbar
9 Lug terminal
10 Vertical busbar
11 Extension busbar
12 Rear connection Note)
13 Auxiliary handle
14 Removable padlock (PL)
15 Fixed padlock (PHL)
16 Mechanical interlock (MIT)
17 Electrical auxiliary
18 Direct rotary handle
19 Extended rotary handle
20 Test kit
21 Voltage module
22 UVT time delay controller (UDC)

Note) Orderable with a breaker

Electrical auxiliaries

The following devices are installed into TS1000 to 1600AF circuit breakers regardless of frame size. And, the electrical auxiliaries can be easily installed in the accessory compartment of the circuit breakers which is cassette type.

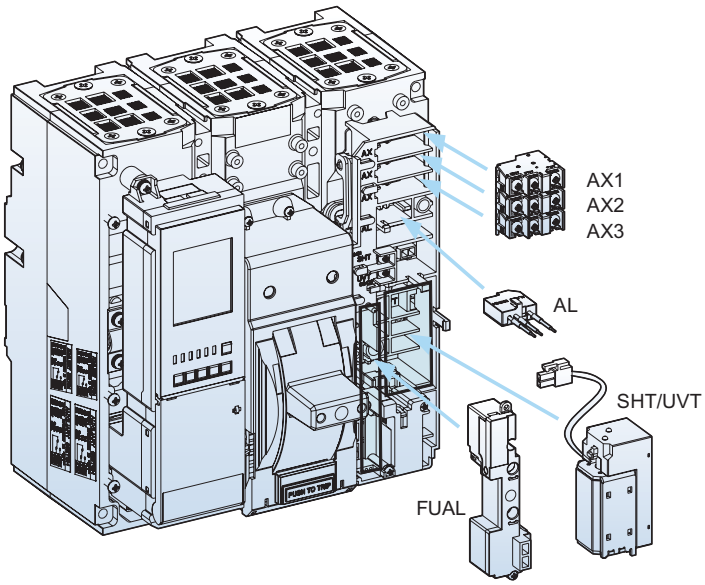

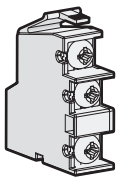

AX

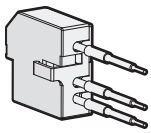

AL

Auxiliary switch (AX)

Auxiliary switch is for applications requiring remote “ON” and “OFF” indication.
Each switch contains two contacts having a common connection.
One is open and the other closed when the circuit breaker is open, and vice-versa.

Alarm switch (AL)

Alarm switches indicate that the circuit breaker has tripped due to overload, short circuit, shunt trip, or undervoltage release conditions. They are particularly useful in automated plants where operators must be signaled about changes in the electrical distribution system.
This switch features a closed contact when the circuit breaker is tripped automatically. In other words, this switch does not function when the breaker is operated manually.
Its contact is open when the circuit breaker is reset.

Contact operation

MCCB	ON OFF		TRIP
Position of AX	AXc1 — AXa1 / AXb1	AXc1 — AXa1 / AXb1	
Position of AL	AXc1 — AXa1 / AXb1		AXc1 — AXa1 / AXb1

Electrical auxiliaries

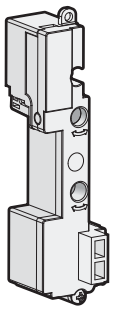

FUAL

Indication switch FUAL

FUAL Indicates that the breaker has tripped due to FAL(overload, short circuit) and UAL(UVT, SHT) separately

Normal position CB no trip	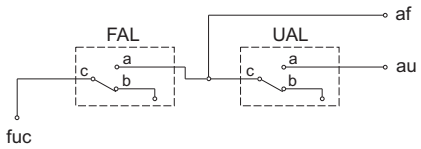 FAL Normal Open / UAL Normal Open
FAL operation CB trip due to OCR	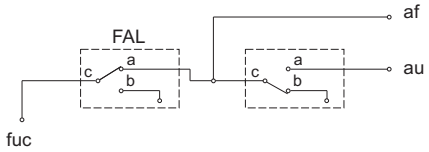 FAL Normal Close / UAL Normal Open
UAL operation CB trip due to UVT or SHT	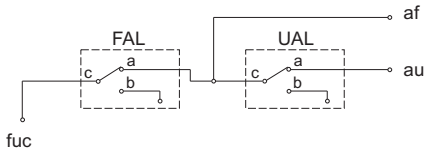 FAL Normal Close / UAL Normal Close

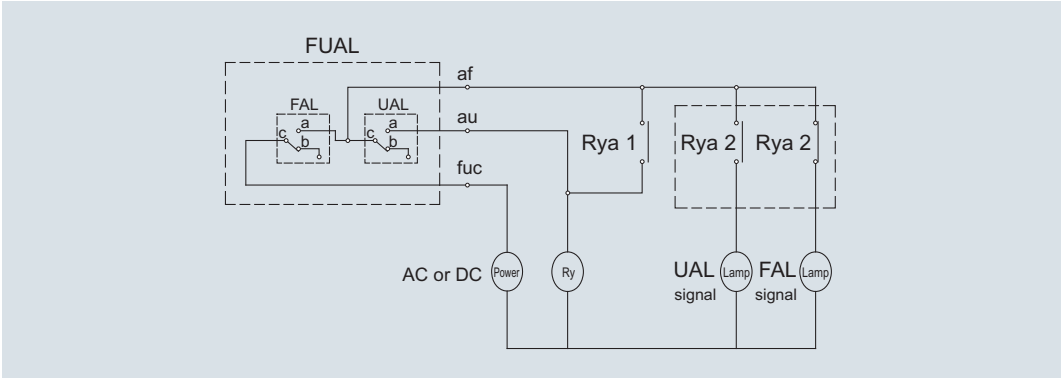

Figure. Example of Lock up Circuit for FUAL

⚠ **Caution**: Please use "Lock up Circuit " following under figure "Example of lock up circuit for FUAL"

⚠ **Caution**: When MCCB is tripped by SHT or UVT, the FAL signal appears for 20ms that is time of being transferred from "b"contact to "a" contact of control relay

⚠ **Caution**: When MCCB is tripped by SHT or UVT, the transfer time of Relay signal(Ryb2 off Rya2 on) is 20ms. if FAL signal is connected with other sequence circuit such as Latch circuit or other look up circuit it may cause to be miss operation. So, please do not use latch circuit or look up circuit with FAL signal.

Electrical auxiliaries

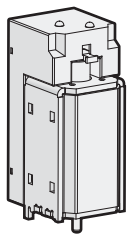

SHT Shunt trip device

SHT is a control device which trips a circuit breaker from remote place, when applying voltage continuously or instantaneously over 200ms to coil terminals(C1, C2).
When UVT coil is installed, its location is changed.

1. Rated voltage and characteristics of Trip coil

Rated voltage [Vn]		Operating voltage range [V]	Power consumption (VA or W)		Trip time [ms]
DC [V]	AC [V]		Inrush	Steady-state	
24~30 -		0.6~1.1 Vn	200	5	Less than 40ms
48~60 48		0.6~1.1 Vn			
100~130	100~130	0.56~1.1 Vn			
200~250 200~250		0.56~1.1 Vn			
-	380~480 0.56~1.1	Vn			

Note) Operating voltage range is the min. rated voltage standard for each rated voltage(Vn).

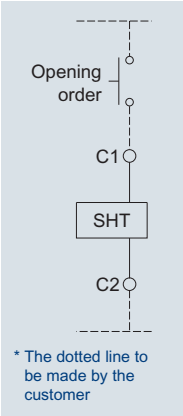

Wiring Diagram

2. Specification of the wire

- Refer to the below table regarding the length and specification of wire when using trip coil with DC 24~30[V] or DC/AC 48~60[V] of rated voltage.

The maximum wire length

		Rated voltage [Vn]			
		DC 24~30 [V]		DC/AC 48 [V]	
Wire type		#14 AWG ($2.08mm^2$)	#16 AWG ($1.31mm^2$)	#14 AWG ($2.08mm^2$)	#16 AWG ($1.31mm^2$)
Operating voltage	100%	95.7m	61m	457.8m	287.7m
	85%	62.5m	38.4m	291.7m	183.2m

Electrical auxiliaries

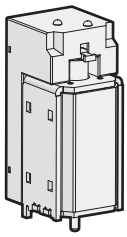

UVT Under Voltage Trip device

- If the voltage of the main or the control power is under voltage, UVT which is installed inside of the breaker breaks the circuit automatically. Please connect with UVT time-delay device in order to present the time delay function because UVT is technically instantaneous type.
- The closing of a circuit breaker is impossible mechanically or electrically if control power not supplied to UVT. To close the circuit breaker, 65~85% ofrated voltage should be applied to both terminals of UVT coil (D1, D2).
- When using UVT coil, the double trip coil can not be used, and the location of trip coil is changed.

1. Rated voltage and characteristics of UVT coil

Rated voltage [Vn]		Operating voltage range [V]		Power consumption (VA or W)		Trip time [ms]
DC [V]	AC [V]	Pick up	Drop out	Inrush	Steady-state	
24~30 -		0.65~0.85 Vn	0.44~0.6 Vn	200	5	Less than 50ms
48~60 48						
100~130	100~130					
200~250 200~250						
-	380~480					

Note) Operating voltage range is the min. rated standard for each rated voltage (Vh).

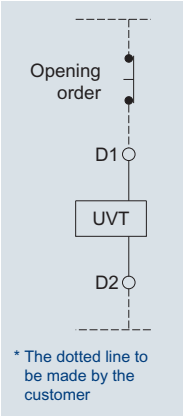

Wiring Diagram

2. Specification of the wire

- Refer to the below table regarding the length and specification of wire when using trip coil with DC 24~30[V] or DC/AC 48~60[V] of rated voltage.

The maximum wire length

		Rated voltage [Vn]			
		DC 24~30 [V]		DC/AC 48 [V]	
Wire type		#14 AWG ($2.08mm^2$)	#16 AWG ($1.31mm^2$)	#14 AWG ($2.08mm^2$)	#16 AWG ($1.31mm^2$)
Operating voltage	100%	48.5m	30.5m	233.2m	143.9m
	85%	13.4m	8.8m	62.5m	39.3m

Note) In case of using UVT coil, the location of TC coil is changed.

OCR Tester [OT]

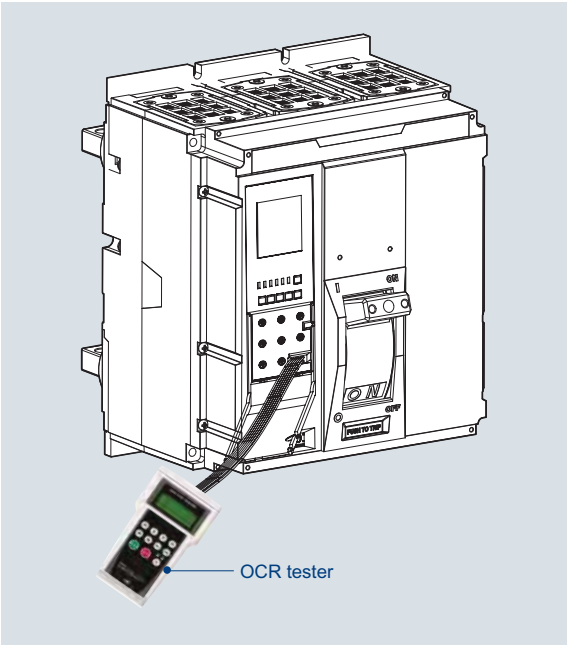

- It is a device which can test for the operation of Trip Relay under no power condition.

1. Maximum 17 times rated current can be inputted.
2. It is possible to enter the current value and phase on each of R/S/T/N
3. Frequency is adjustable.
4. It is available to test for long time delay/short time delay/instantaneous /ground fault.

Configuration

R S T N	R, S, T, N phase signal input
▲ ▼	Increase/Decrease signal input
ENT. ESC	Signal setting/Delete
START STOP	Waveform generation/Stop
50Hz 60Hz Hz	Select frequency

UVT Time Delay Controller [UDC]

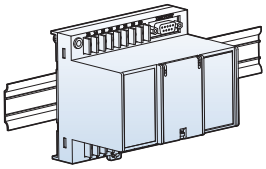

- UVT is a device which makes ACB tripped automatically to prevent the accident on load side due to under voltage or power breakdown.
  There are two types, Instantaneous type and time delay type.
- It can be installed on the rail or to the cradle.
- Instantaneous type: only available with UVT coil.
- Time delay type: available by connecting UVT coil and UVT time delay controller.
- Common use for the all types.

1. The rated voltage and characteristic of UVT time delay controller

Rated voltage [Vn]		Operating voltage range [V]		Power consumption (VA or W)		Trip time[s]
DC [V]	AC [V]	Pick up	Drop out	Inrush	Steady-state	
48~60 48		0.65~0.85 Vn	0.44~0.65Vn	200	5	0.5, 1, 1.5, 3
100~130 100~130						
200~250 200~250						
-	380~480					

Note) Operating voltage range is the min. rated standard for each rated voltage (Vh).

2. Wiring

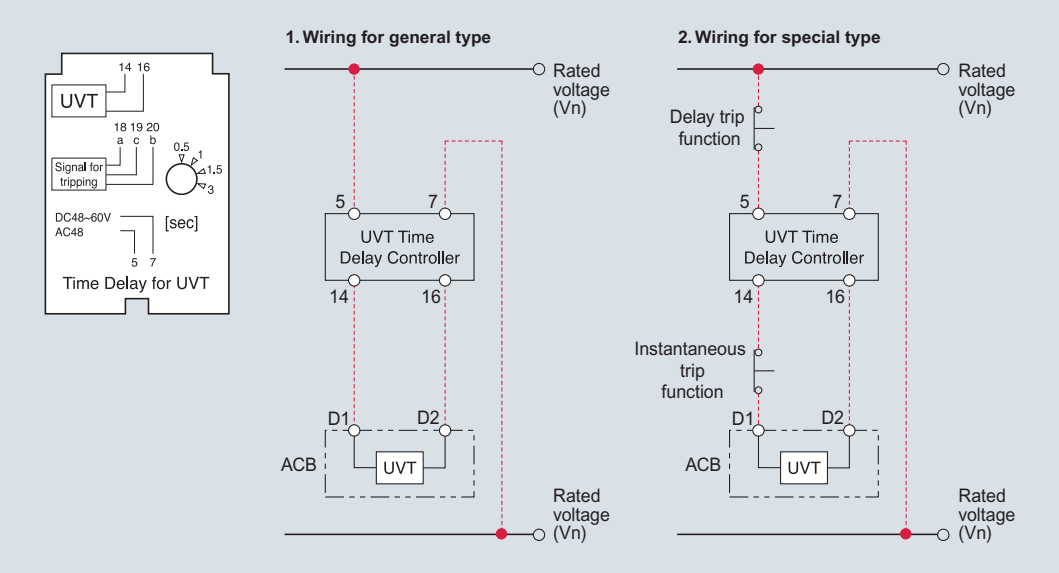

* The wiring presented with red color should be set by users.

Rotary handle

The rotary handle operating mechanism is available in either the direct version or in the extended version on the compartment door.
It is always fitted with a compartment door lock and on a request it can be supplied with a key lock in the open position. There are direct rotary handletwo and extended rotary handle.

Direct rotary handle

Degree of protection IP40

There are three types of direct rotary handle according to line load direction.
Indication of the three positions O(OFF), I(ON) and tripped. Circuit breaker locking capability in the OFF position by one to three padlocks, shackle diameter 5 to 6 mm (not supplied).

L Type

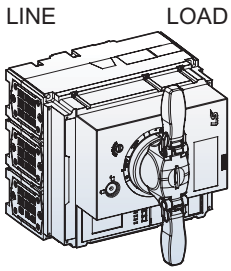

S Type

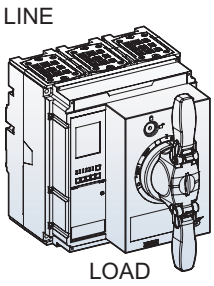

R Type

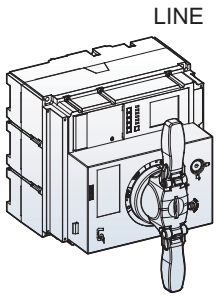

Door cut type for Direct rotary handle

A Type

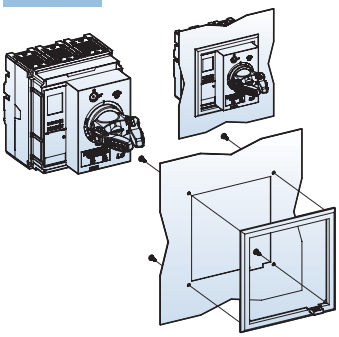

B Type

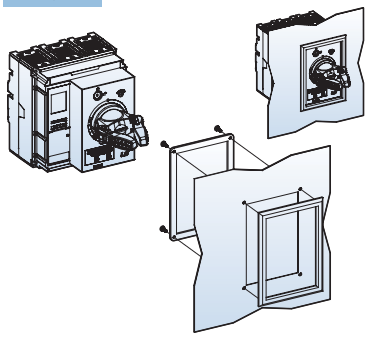

Dimension of door cut

A Type

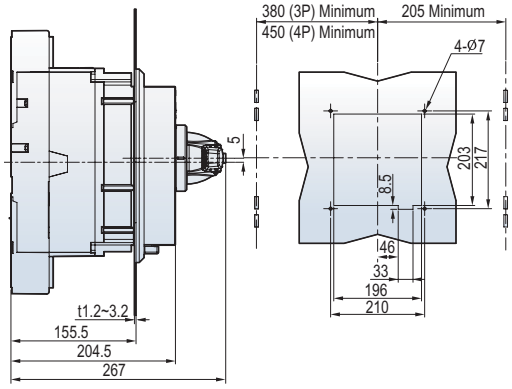

B Type

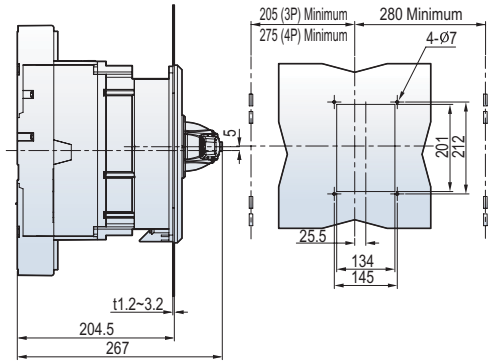

Note) 1. In case of disassembling and assembling the main cover, screw should be tightened in specific torque of1.5N.m (15.3kgf.cm)
2. In case of disassembling and assembling the main cover by over tightening torque, the parts of MCCB can be damaged.

Rotary handle

Locking system(Door lock)

The panel door can be locked at ON and TRIP position of rotary handle.
To open the panel door at ON position, just rotate release screw counterclockwise.
When MCCB is on position, panel door is can't be open.

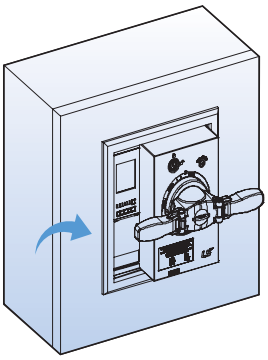

OFF State

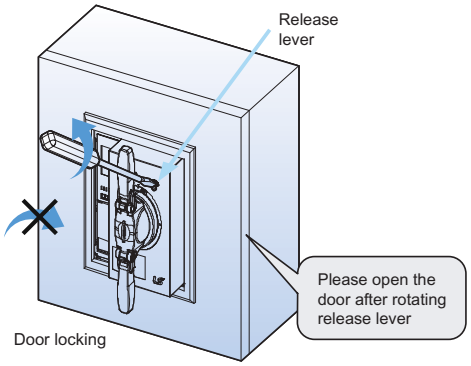

ON State

⚠ **Caution**

- If the door is opened with much pressure when the position of handle is ON or TRIP, the handle lock lever will be damaged

Key lock

After locking handle, be sure that the key removed.

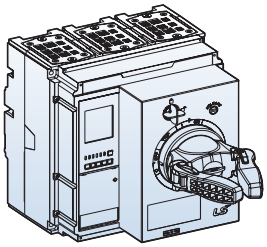

Key lock: locking OFF position

Locking by rotary handle with a key lock
A locking can be done by using the rotary handle which has key lock device.
The lock is used to lock the circuit-breaker in the OFF position.

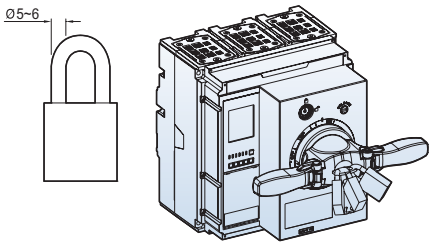

Locking at ON or OFF position

Padlocking by rotary handle
A padlocking can be also done by using the rotary handle.
The lock is used to lock the circuit-breaker in the ON and OFF position.
Maximum three (3) padlocks with shackle diameters ranging from 5 to 6mm may be used. (Padlocks are not supplied)

Rotary handle

Extended rotary handle

Degree of protections IP55

There are three types of extended rotary handle according to line & load direction
With Extended rotary handles, can be operate MCCB at the back of switchboards, from the switchboard front.
Indication of the three positions O(OFF), I(ON) and tripped circuit breaker locking capability in the OFF position by one to three padlocks, shackle diameter 5 to 6mm (not supplied).
When MCCB is on position, panel door is can't be open.

L Type

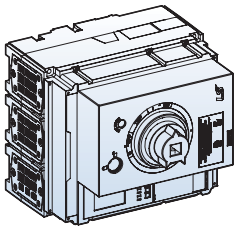

S Type

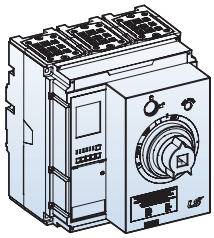

R Type

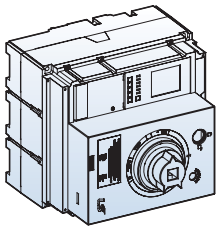

Shaft

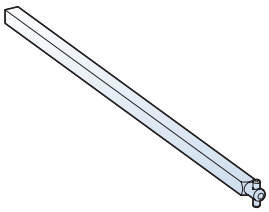

Handle

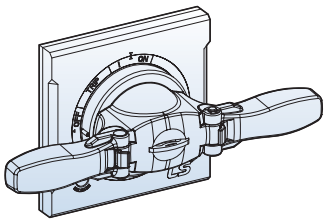

Dimension of door cut

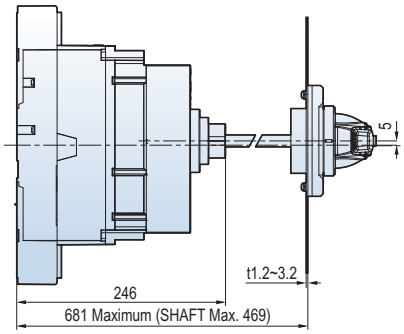

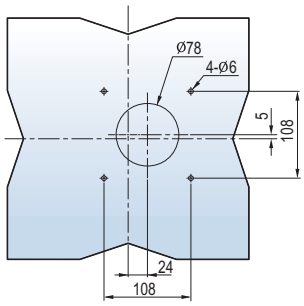

Rotary handle

Locking system(Door lock)

The panel door can be locked at ON and TRIP position of rotary handle.
To open the panel door at ON position, just rotate release screw clockwise.
When MCCB is on position, panel door is can't be open

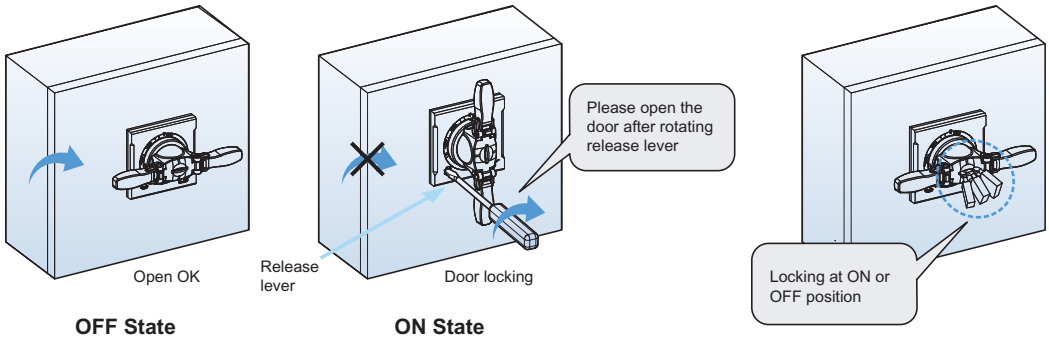

⚠ **Caution**

- If the door is opened with much pressure when the position of handle is ON or TRIP, the handle lock lever will be damaged

Degree of protections

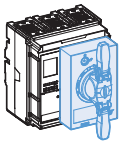

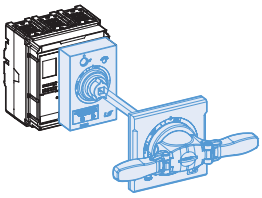

Type	Degree of protection	IP
Circuit breaker with cover frame and rotary direct handle	The access probe of 1.0mm diameter shall not penetrate.	IP40
Circuit breaker with cover frame and rotary extended handle	Totally protected against ingress of dust and water jets from any direction	IP65

Locking devices

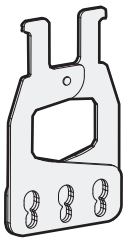

Removable padlock(PL)

This device allows the handle to be locked in the "OFF" position.
Locking in the OFF position guarantee isolation according to IEC 60947-2.

The locking device for the toggle handle can be installed in 3-pole and 4-pole circuit-breakers. Maximum three (3) padlocks with shackle diameters ranging from 5 to 8mm may be used. (Padlocks are not supplied)

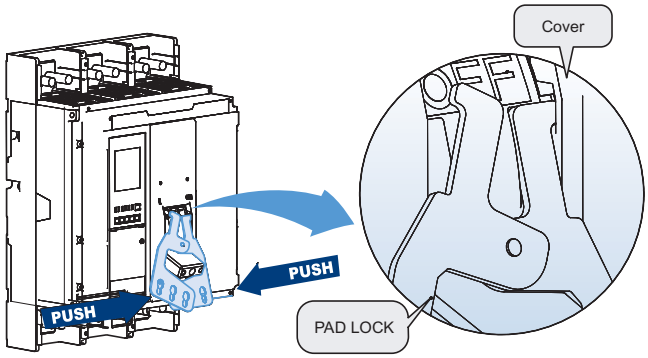

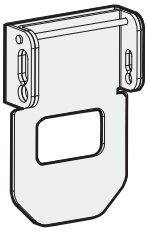

Fixed padlock (PHL)

This device allows the handle to be locked in the "ON" and "OFF" position.
Locking in the OFF position guarantee isolation according to IEC 60947-2.

The locking device for the toggle handle can be installed in 3-pole and 4-pole circuitbreakers. Maximum three (3) padlocks with shackle diameters ranging from 5 to 8mm may be used. (Padlocks are not supplied)

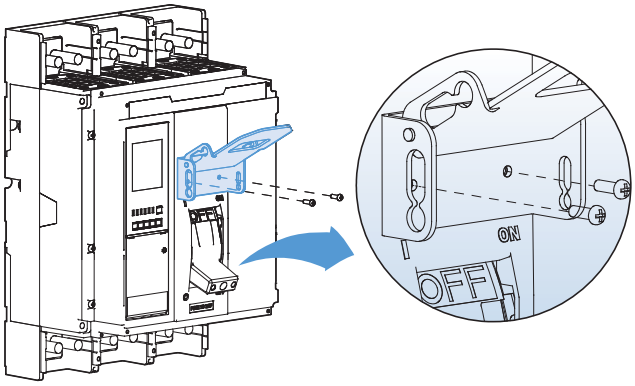

Locking devices

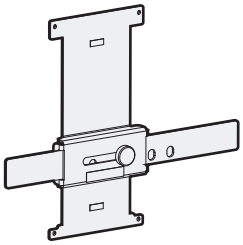

Mechanical interlock (MIT)

The mechanical interlock (MIT) can be applied on the front of two breakers mounted side by side, in either the 3-pole or 4-pole version and prevents simultaneous closing of the two breakers.

Fixing is carried out directly on the cover of the breakers.

The front interlocking plate allows installation of a padlock in order to fix the position. (possibility of locking in the O-O position as well)
This mechanical interlocking device is very useful and simple for consisting of manual source changeover system

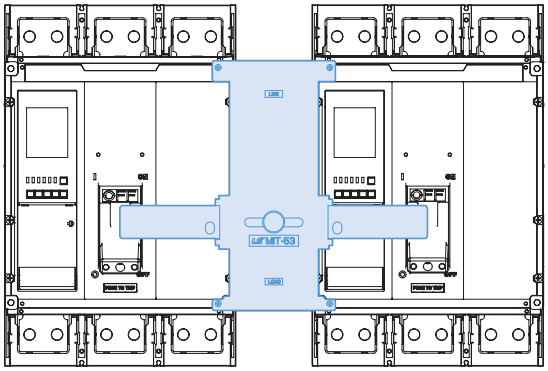

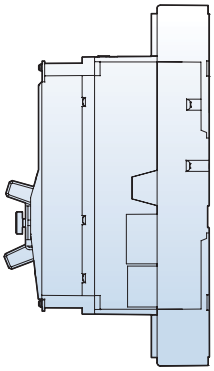

Terminal

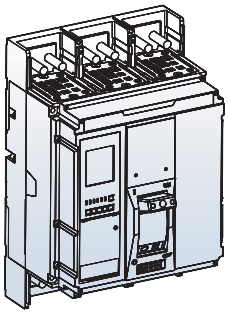

Front connection of Fixed devices

Bars

Fixed, front-connection Susol TS1600AF devices are equipped with terminals comprising captive screws for direct connection of bars.
Other connection possibilities for bars include vertical-connection adapters for edgewise bars and spreaders to increase the pole pitch to 95 mm.

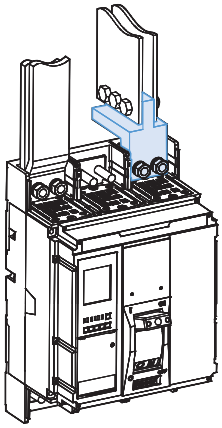

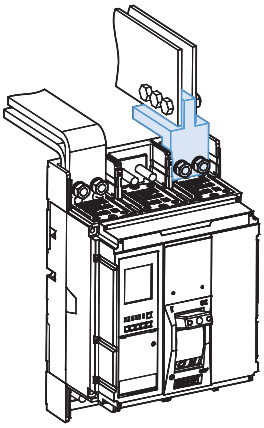

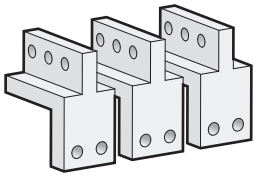

Vertical busbar

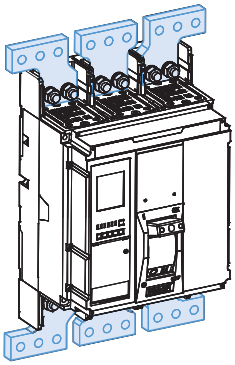

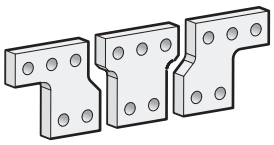

Busbars

Bare cables

Lug terminals may be used to connect four 85 up to 240㎟ copper or aluminum cables for each phases. Bare cable connection is possible for rating up to and including 1250A

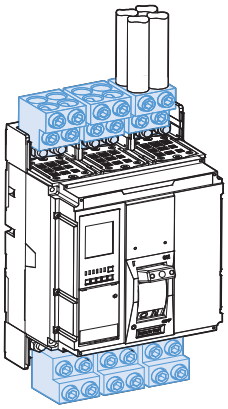

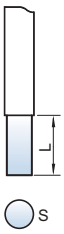

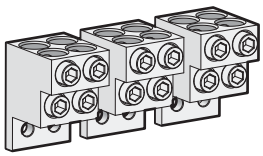

Lug terminal

L(mm) 25~55	
S(㎟) Cu/Al	4×85 to 4×240
Torque(kgf · cm) 564	

Terminal

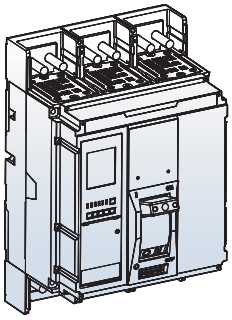

Crimped Terminals

Crimped terminals are combined with the vertical and extension busbars.
One to four cables with crimped terminals(±300 ㎟) may be connected.

To ensure stability, connectors must be fixed and insulated between the terminal extensions.

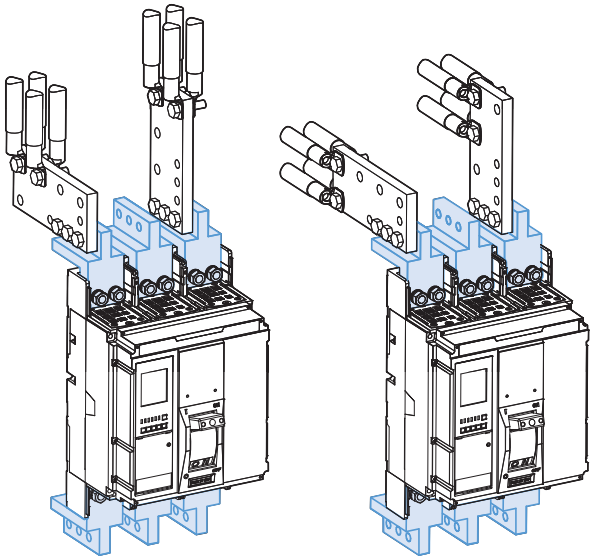

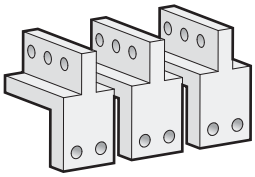

Vertical busbar

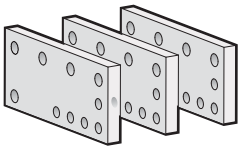

Extension busbars

Terminal

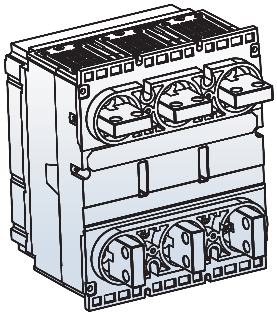

Rear connection of Fixed devices

(Orderable with a breaker)

Bars

Rear connection devices equipped with horizontal or vertical connectors may be directly connected to flat or edgewise busbars, depending on the position of the connectors.
Busbars are available to increase the pole pitch to 95mm

The standard type of rear connection type is horizontal type.
If customer want to conect busbars with vertical or comvination(horizontal and vertical) please order separately.

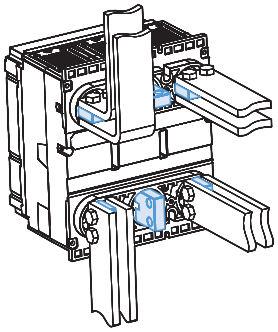

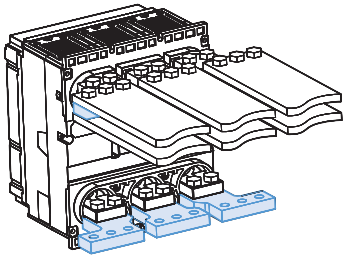

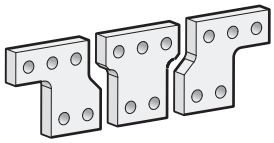

Busbars

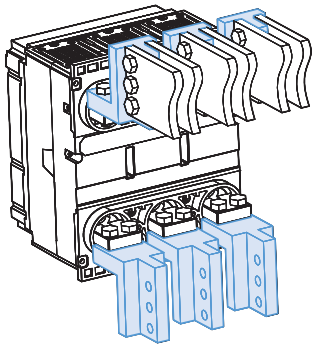

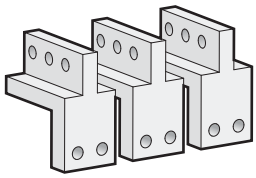

Vertical busbar

Crimped Terminals

Crimped terminals enable connection of one to four cables with crimped terminals(±300 ㎟)
To ensure stability, connectors must be fixed and insulated between the terminal extensions

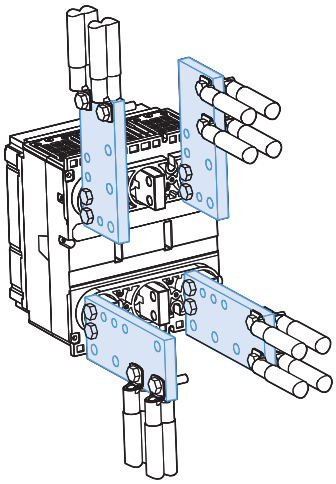

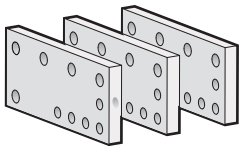

Extension busbars

Insulation

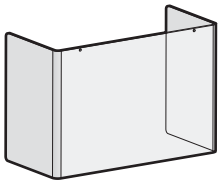

Terminal cover

Mounted on fixed, front-connection devices,
it insulates power-connection points.

Barrier

These barriers are insulated between the phases for increase insulation level.
It also can be easily mounted, even the circuit-breaker already installed, inserting them in the corresponding slots.
They are incompatible with both the insulating terminal covers.
It is possible to mount the phase separating partitions between two circuit-breakers side

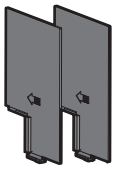

Barrier for front connection

paking unit: 2ea/3Pole, 3EA/4Pole

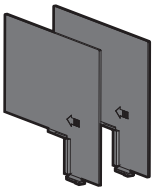

Barrier for extension terminal

paking unit: 2ea/3Pole, 3EA/4Pole

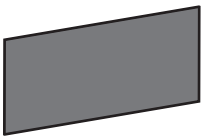

Plate protection

paking unit: 1ea/3Pole, 1ea/4Pole

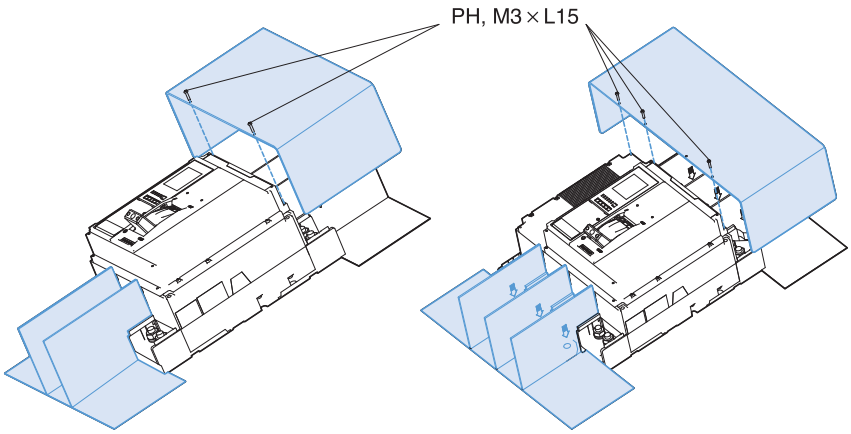

3Pole 4Pole

Standard accessories

The following accessories for mounting, connection, insulation, handle operation are standard items and are packed with Susol TD & TS series circuit breakers.

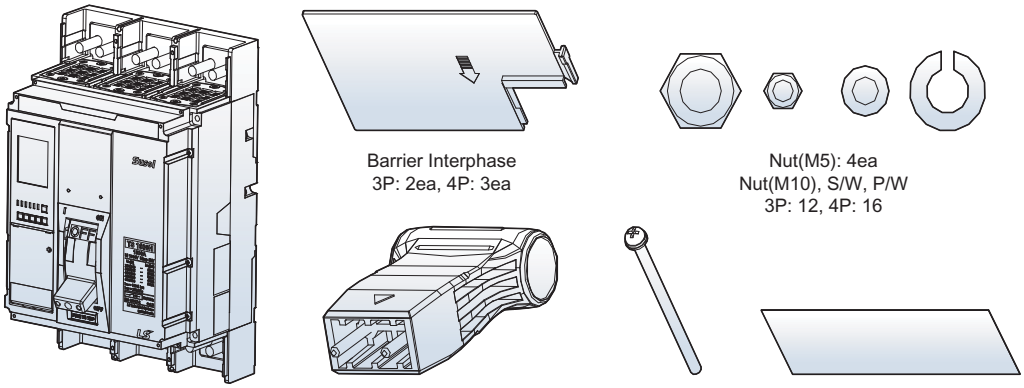

Components

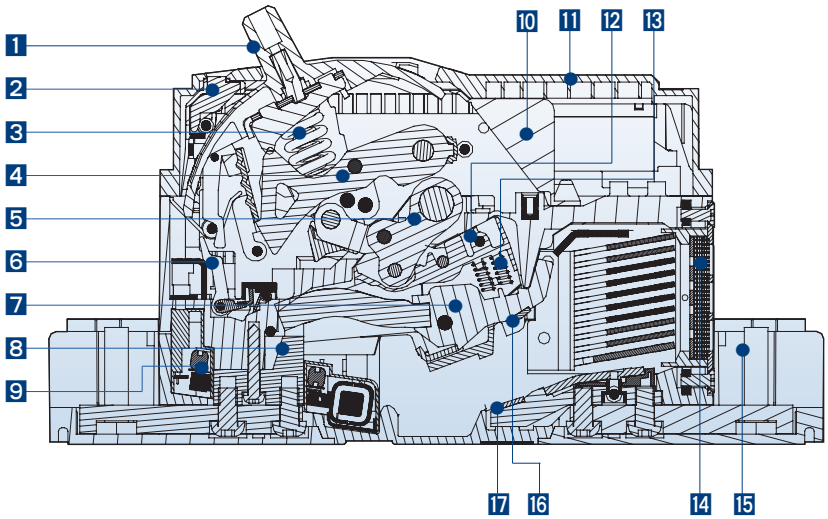

1 Handle
2 Test Button
3 Main Spring
4 Link Ass'y
5 Main Shaft Ass'y
6 Hard Trip Device
7 Moving Contactor
8 Load Terminal
9 Power CT
10 Handle Cover
11 Main Cover
12 Wall Holder Contactor
13 Contact Spring
14 Arc Chute
15 Terminal Bolt
16 Moving Tip
17 Fixed Tip

A-4. Mounting & Connection

Fixed mounting A-4-1
Connecting terminal & conductor A-4-2
Safety clearance A-4-3
Example of installation A-4-6
Connections for 1600AF A-4-7
Size of busbar for 1600AF A-4-8

Fixed mounting

Susol TD and TS circuit-breakers can be directly connected to the mounting plate.
If busbars or terminals are used to connect the circuit breaker
on the back of the mounting plate,
the appropriate safety clearances must be observed.

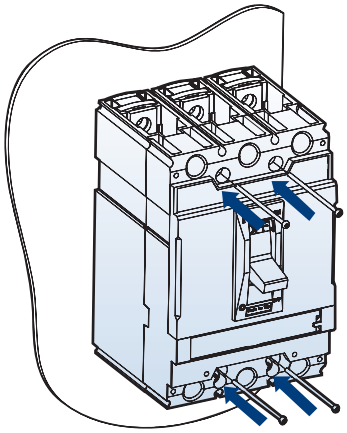

	TD100, TD160	TS100,TS160, TS250	TS400, TS630	TS800
Screw for mounting	 1Pole:2EA(M3×75) 3Pole:2EA(M4×75) 4Pole:4EA(M4×75)	 3Pole:2EA(M4×75) 4Pole:4EA(M4×75)	 3Pole:4EA(M5×85) 4Pole:4EA(M5×85)	 3Pole:4EA(M6×100) 4Pole:4EA(M6×100)
Nut for mounting	-	-	 3Pole:4EA 4Pole:4EA	 3Pole:4EA 4Pole:4EA
Screw for connection of terminals, Spreader	 1Pole:2EA(M8×20) 3Pole:6EA(M8×20) 4Pole:8EA(M8×20)	 3Pole:6EA(M8×20) 4Pole:8EA(M8×20)	 3Pole:6EA(M10×30) 4Pole:8EA(M10×30)	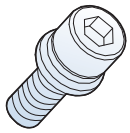 3Pole:6EA(M12×35) 4Pole:8EA(M12×35)
	Torque: Max 78kgf · cm	Torque: Max 147kgf · cm	Torque: Max 490kgf · cm	Torque: Max 630kgf · cm

Connecting terminal & conductor

		Terminal (mm)	Conductor (mm)
TD100 TD160	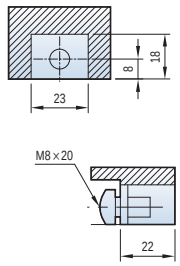	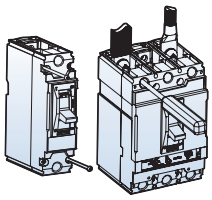 Max 78kgf · cm	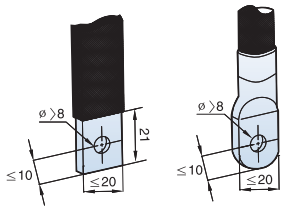
TS100 TS160 TS250	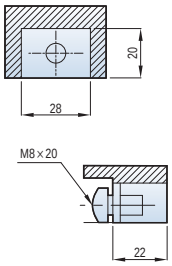	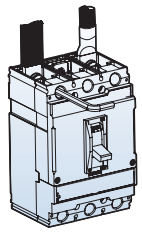 Max 147kgf · cm	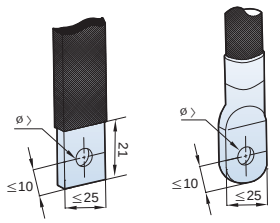
TS400 TS630	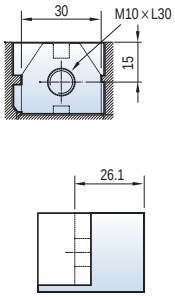	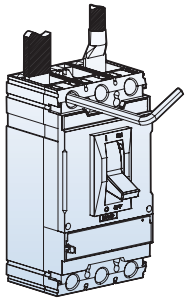 Max 490kgf · cm	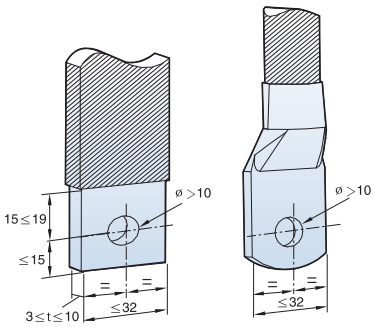
TS800	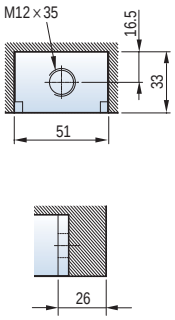	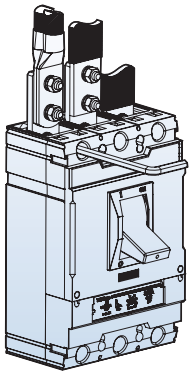 Max 630kgf · cm	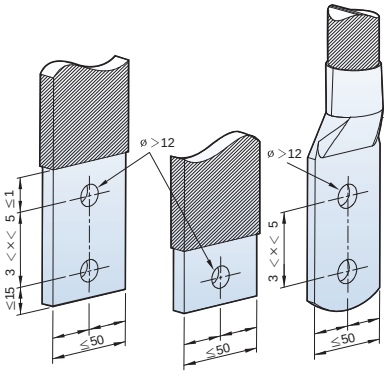

Safety clearance

When installing a circuit breaker, safety clearances must be kept between the breaker and panels, bars and other protection devices installed nearby. These safety clearances are depend on the ultimate breaking capacity and are defined by tests carried out in accordance with standard IEC 60947-2.

When a short circuit interruption occur, high temperatures pressures are present in and above the arc chambers of the circuit-breaker. In order to allow the pressure to be distributed and to prevent fire and arcing or short-circuit currents, safety clearances are required.

A: Insulation distance to ceiling for installation in metallic cubicle

	A(mm)	
	415V	240V
TD100N, TD160N	35	30
TD100H, TD160H	35	30
TD100L, TD160L	35	30
TS100N, TS160N, TS250N	35	30
TS100H, TS160H, TS250H	35	30
TS100L, TS160L, TS250L	35	30
TS400N, TS630N	60	50
TS400H, TS630H	60	50
TS400L, TS630L	60	50
TS800N	100	80
TS800H	100	80
TS800L	100	80

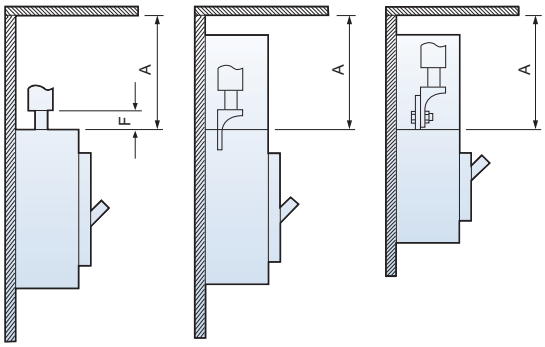

C1: Minimum distance for superimposed circuit breakers (from lower circuit breaker to uninsulated part of terminal of upper circuit breaker)
C: C1+ the dimension of exposed conducting part (The dimension of exposed conduct)

	C1(mm)		C(mm)
	415V	240V	
TD100N, TD160N	35	30	The dimension of exposed conduct
TD100H, TD160H	35	30	
TD100L, TD160L	35	30	
TS 100N, TS160N, TS250N	35	30	
TS100H, TS160H, TS250H	35	30	
TS100L, TS160L, TS250L	35	30	
TS400N, TS630N	60	50	
TS400H, TS630H	60	50	
TS400L, TS630L	60	50	
TS800N	100	80	
TS800H	100	80	
TS800L	100	80	

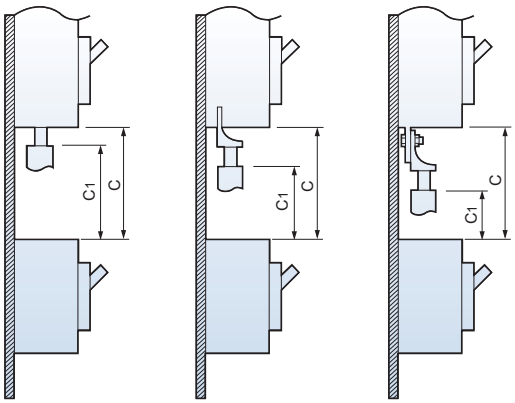

Direct connection of cable

Connection by using a cable terminal or ring terminal

Connection by using a cable terminal with extended terminal

Safety clearance

D: Insulated length of main terminal of circuit breaker

D1: Connection by ring terminal after taping
(Larger than the dimension of exposed conducting part)

D2: Connection by bar after taping

D3: Connection by ring terminal using insulation barrier
(Larger than the dimension of exposed conduct

D4: Connection by bar using insulation barrier

	D1 (mm)	D2 (mm)	D3 (mm)	D4 (mm)
TD100N, TD160N	The dimension of exposed conduct + 20	50	The dimension of exposed conduct + 20	50
TD100H, TD160H		50		50
TD100L, TD160L		50		50
TS100N, TS160N, TS250N		100		100
TS100H, TS160H, TS250H		100		100
TS100L, TS160L, TS250L		100		100
TS400N, TS630N		200		200
TS400H, TS630H		200		200
TS400L, TS630L		200		200
TS800N		200		200
TS800H		200		200
TS800L		200		200

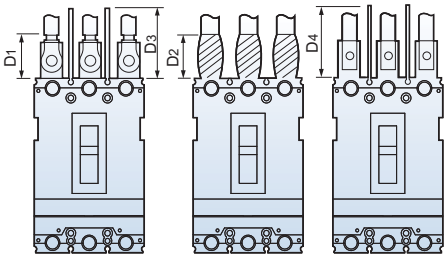

Note) If uninsulated conductors are used for connection, please insulate by taping to the point where the conductors overlap with the insulation barrier or to the root of the circuit breaker.

E: Distance from a side of breaker to side plate

	E(mm)	
	415V	240V
TD100N, TD160N	25	15
TD100H, TD160H	25	15
TD100L, TD160L	25	15
TS100N, TS160N, TS250N	25	15
TS100H, TS160H, TS250H	25	15
TS100L, TS160L, TS250L	25	15
TS400N, TS630N	20	15
TS400H, TS630H	20	15
TS400L, TS630L	20	15
TS800N	45	20
TS800H	45	20
TS800L	45	20

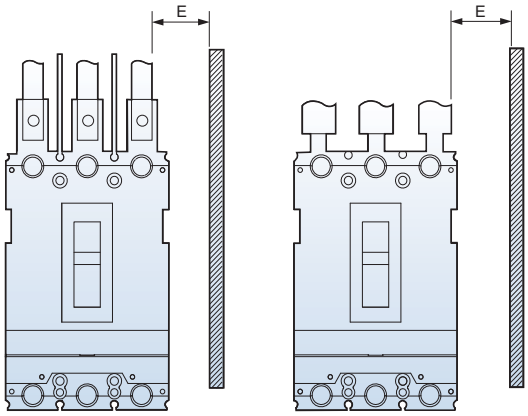

Safety clearance

F: The dimension of exposed conducting part

	F (mm)
TD100N, TD160N	20
TD100H, TD160H	20
TD100L, TD160L	20
TS100N, TS160N, TS250N	10
TS100H, TS160H, TS250H	10
TS100L, TS160L, TS250L	10
TS400N, TS630N	10
TS400H, TS630H	10
TS400L, TS630L	10
TS800N	10
TS800H	10
TS800L	10

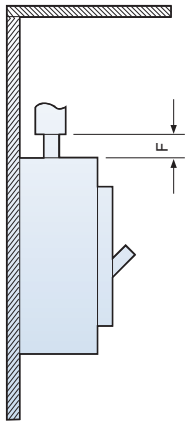

G: Minimum center distance for two horizontally installed circuit-breakers

	G (mm)
TD100N, TD160N	0
TD100H, TD160H	0
TD100L, TD160L	0
TS100N, TS160N, TS250N	0
TS100H, TS160H, TS250H	0
TS100L, TS160L, TS250L	0
TS400N, TS630N	0
TS400H, TS630H	0
TS400L, TS630L	0
TS800N	0
TS800H	0
TS800L	0

Note) In case of using long or short terminal covers.

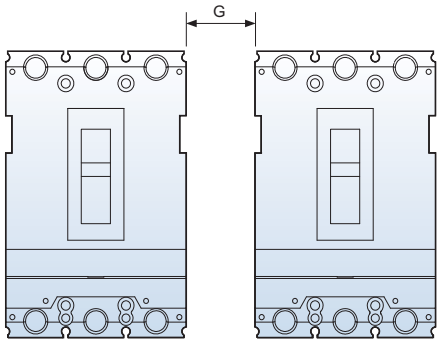

Example of installation

TD100/160
TS100/160/250

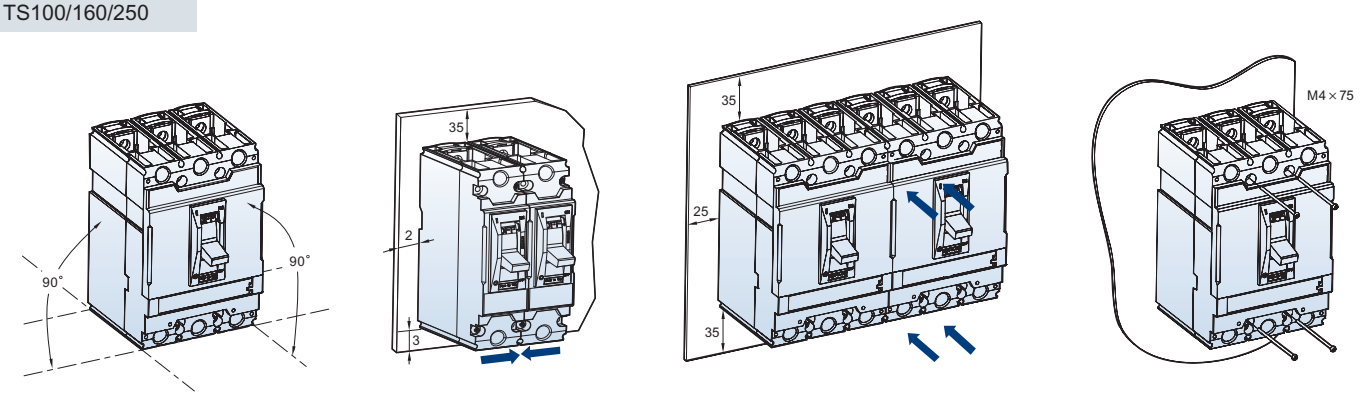

TS400/630

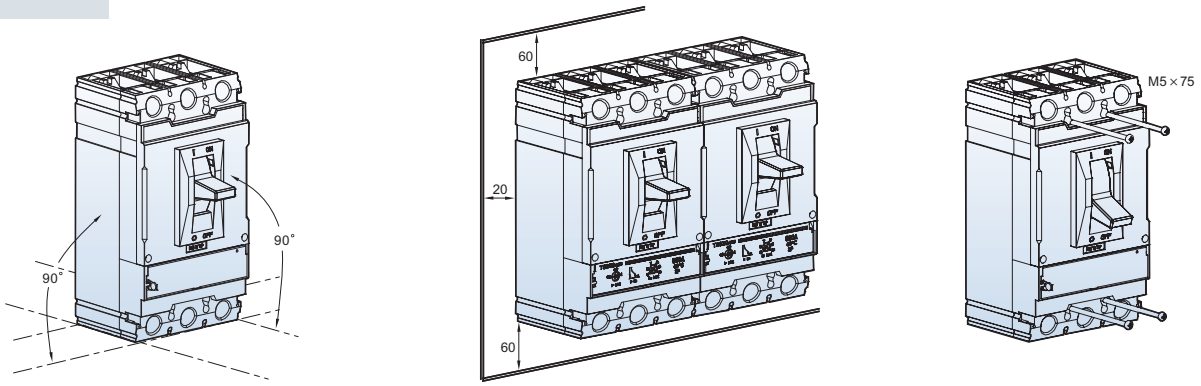

TS800

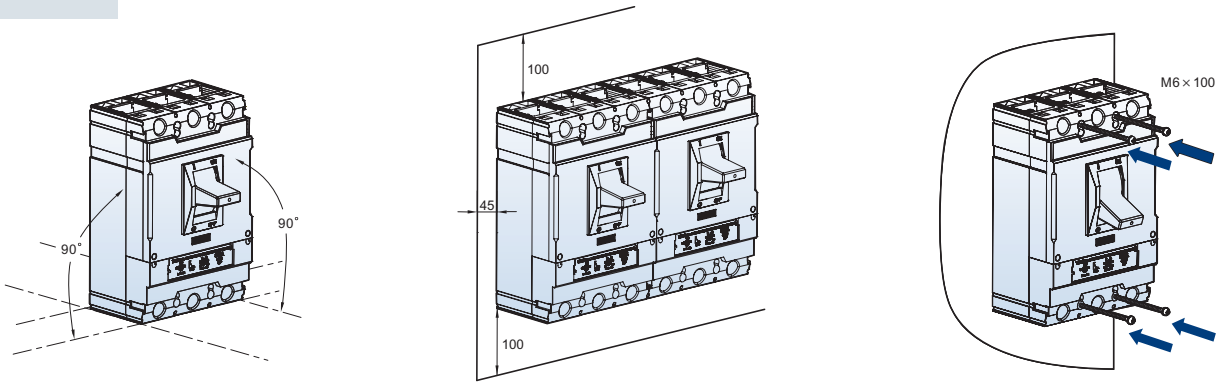

Note) In case of using long or short terminal covers,
no need to consider on minimum center distance for two horizontally installed circuit-breakers

Connections for 1600AF

The quality of busbar connections depends, among other things, on the tightening torques used for nuts and bolts. Over-tightening may have the same consequences as under-tightening.
The correct tightening torques for the connection of busbars to the circuit breaker terminals are indicated in the table below.

Examples of busbar connections

Susol TS1600 MCCB may be installed vertically, horizontally or flat on their back.

Front type

Front type with bars (on backplate or rail)

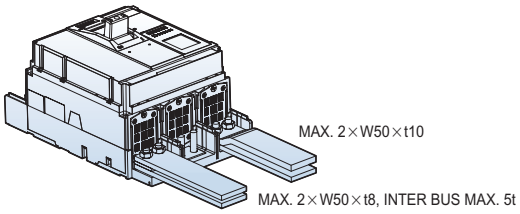

Front type with basbar (only on rail)

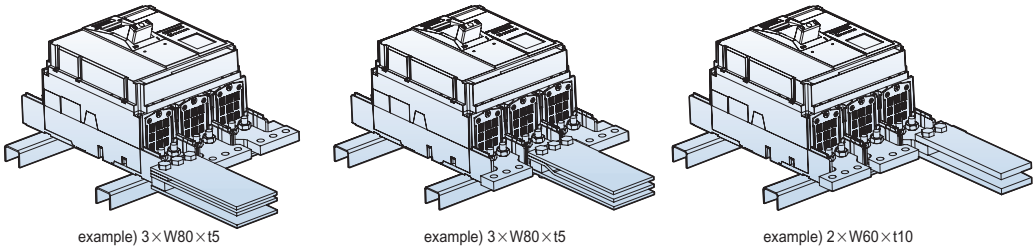

Rear type with bars (only on backplate)

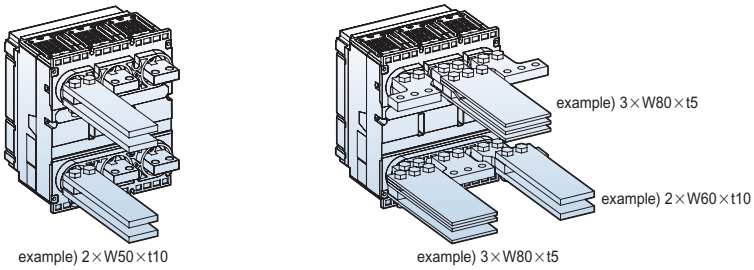

Insulation distance

Examples

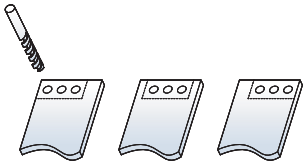

Tightening torques for busbar

Bolt	Drilling diameter (mm)	Tightening torque (kgf · cm)
M10	11	240~500

Insulation distance

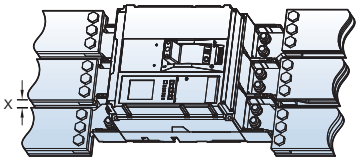

Dimension(mm)

Utillsation voltage	X minimum
Ui≤600V	8mm
Ui≤1000V	14mm

Size of busbar for 1600AF

The following tables are based on the following assumptions;
- Maximum permissible temperature of busbars are 100°C
- T : Temperature around the circuit breaker and its connections

Note) 1. The values presented in the tables are the result of trials and theoretical calculations on the basis of the assumption mentioned above.
2. These tables are intended as an aid in designing connection, however, the actual values must be confirmed by tests on the installation.

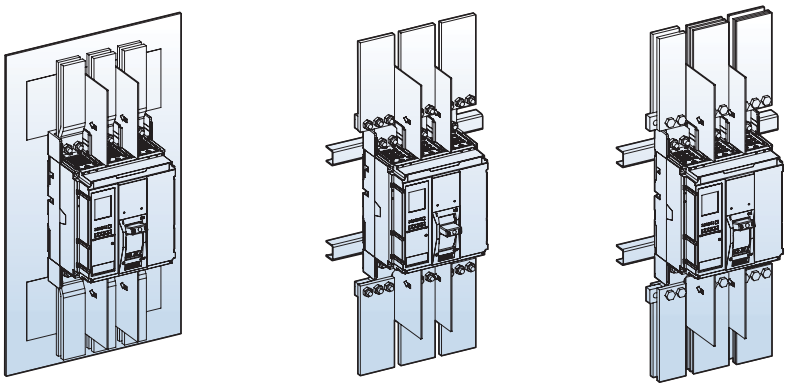

Insulation barrier and plate protection on line side is standard.
If customer want to using insulation accessories on load side, please oder separately.

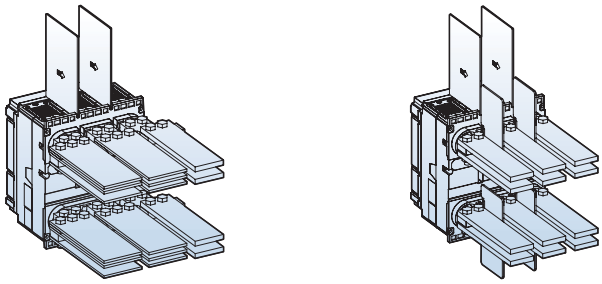

Front and horizontal rear connection

Model	Maximum current	T:40°C Number of busbars		T:50°C Number of busbars		T:60°C Number of busbars	
		t=5mm	t=10mm	t=5mm	t=10mm	t=5mm	t=10mm
TS1000	800	2b.5t×50	1b.10t×50	2b.5t×50	1b.10t×50	2b.5t×50	1b.10t×60
	1000	3b.5t×50	1b.10t×60	3b.5t×50	2b.10t×50	3b.5t×60	2b.10t×50
TS1250	1250	3b.5t×50	2b.10t×40	3b.5t×50	2b.10t×50	3b.5t×60	2b.10t×50
		2b.5t×80	2b.10t×40	2b.5t×80			
TS1600	1400	2b.5t×80	2b.10t×40	2b.5t×80	2b.10t×50	3b.5t×80	2b.10t×60
	1600	3b.5t×80	2b.10t×60	3b.5t×80	2b.10t×60	3b.5t×80	3b.10t×50

Vertical rear connection

Model	Maximum current	T:40°C Number of busbars		T:50°C Number of busbars		T:60°C Number of busbars	
		t=5mm	t=10mm	t=5mm	t=10mm	t=5mm	t=10mm
TS1000	800	2b.5t×50	1b.10t×50	2b.5t×50	1b.10t×50	2b.5t×50	1b.10t×50
	1000	2b.5t×50	1b.10t×50	2b.5t×50	1b.10t×50	2b.5t×60	1b.10t×60
TS1250	1250	2b.5t×60	1b.10t×60	3b.5t×50	2b.10t×40	3b.5t×50	2b.10t×40
TS1600	1400	2b.5t×80	1b.10t×80	2b.5t×80	2b.10t×50	3b.5t×60	2b.10t×50
	1600	3b.5t×60	2b.10t×50	3b.5t×60	2b.10t×50	3b.5t×80	2b.10t×60

MCCB
Susol
TS 1600H
1600A
TS 630L
TS 250L
TD 100L
TD 100H
TRIP
ON
OFF

A-5. Characteristics curves

Susol MCCB up to 800AF

Thermal-magnetic trip units (TE100, TE160) A-5-1
Thermal-magnetic trip units (TD100, TD160, TS100) A-5-3
Magnetic only trip units (TS100, TS160) A-5-6
Thermal-magnetic trip units (TS160, TS250) A-5-7
Magnetic only trip units (TS250) A-5-11
Thermal-magnetic trip units (TS400) A-5-12
Magnetic only trip units (TS400) A-5-14
Thermal-magnetic trip units (TS630) A-5-15
Magnetic only trip units (TS630) A-5-17
Thermal-magnetic trip units (TS800) A-5-18
Magnetic only trip units (TS800) A-5-20
Electronic trip unit (ETS) A-5-21
Electronic trip unit (ETM) A-5-21

Susol MCCB 1600AF

Long-time delay (L) A-5-23
Short-time delay (S) A-5-24
Instantaneous (I), Ground fault (G) A-5-25
IDMTL A-5-26
Pre Trip Alarm A-5-27

Specific let-through energy curves A-5-28

Current-limiting curves A-5-31

Circuit breakers with thermal-magnetic trip units

TE100

FTU

FMU

16~100A

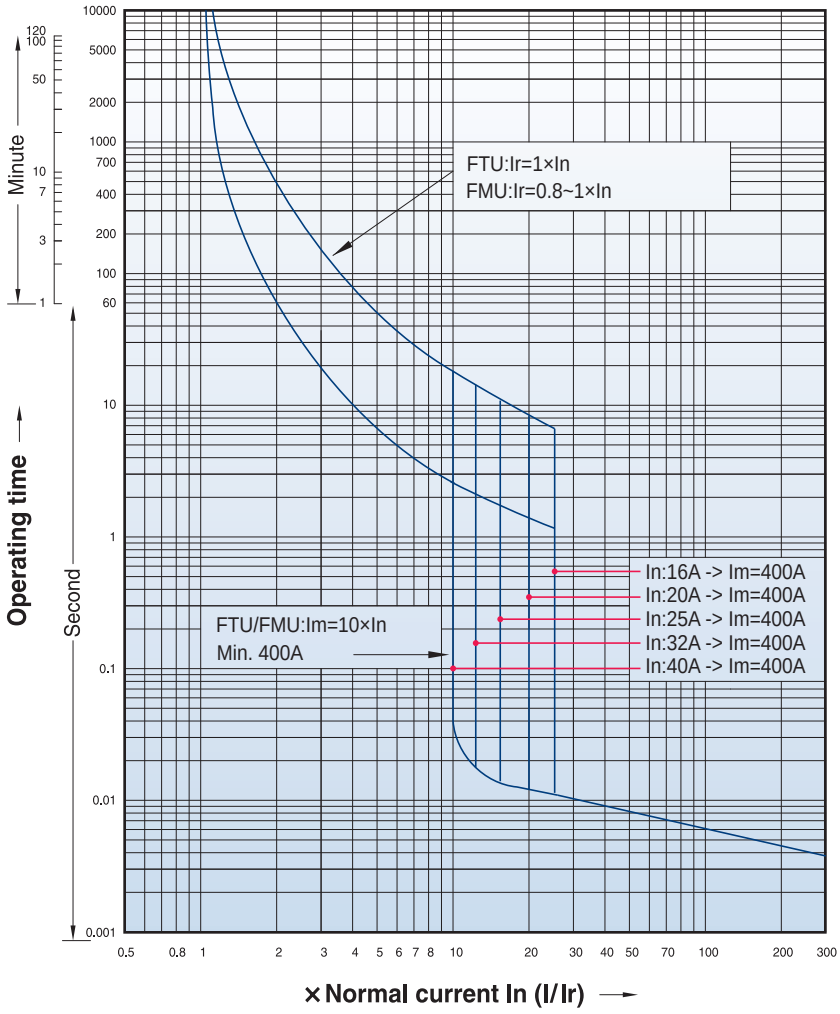

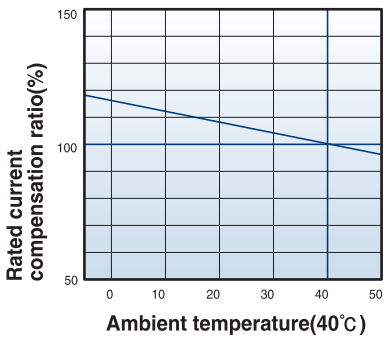

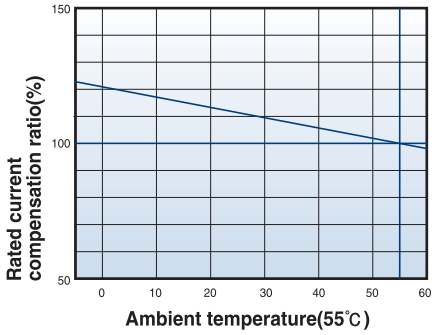

Circuit breakers with thermal-magnetic trip units

TE160

FTU

FMU

100~160A

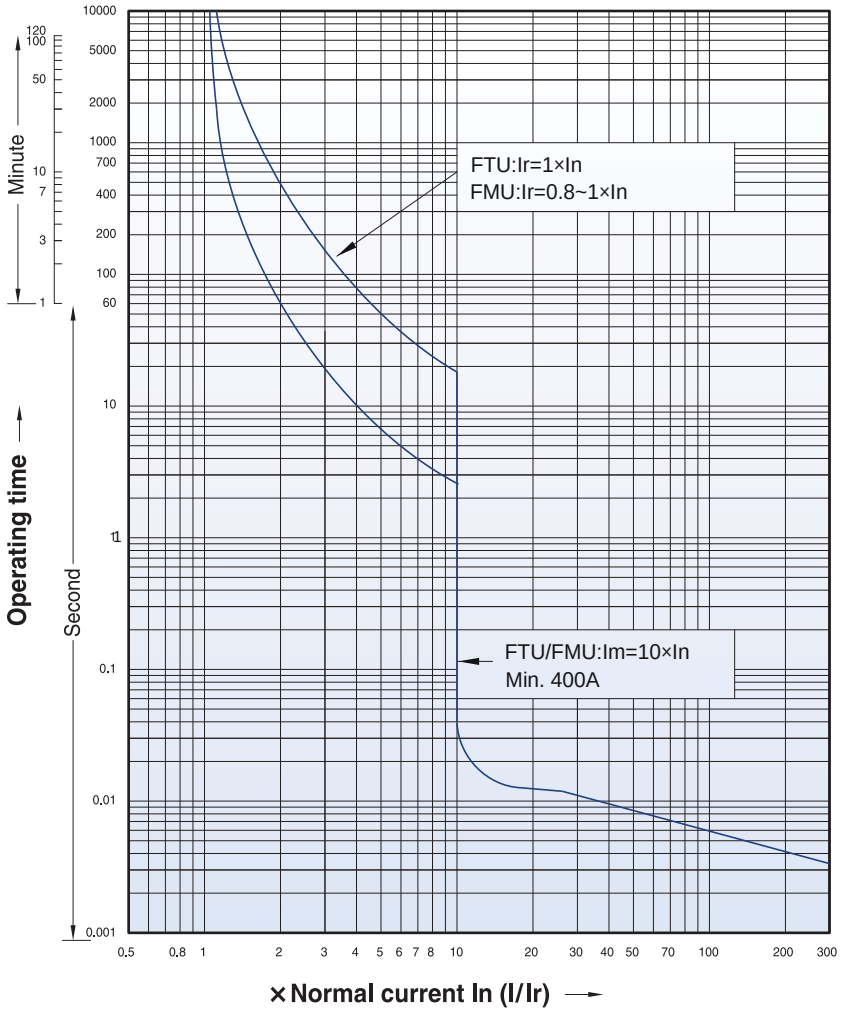

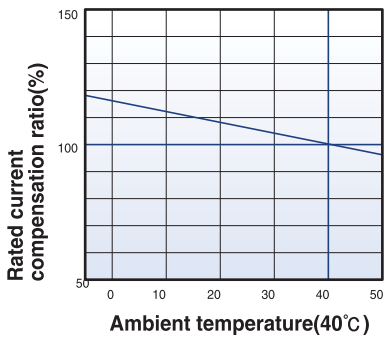

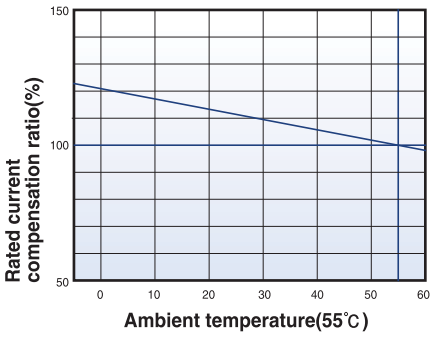

Circuit breakers with thermal-magnetic trip units

TD100

FTU
FMU
16~100A

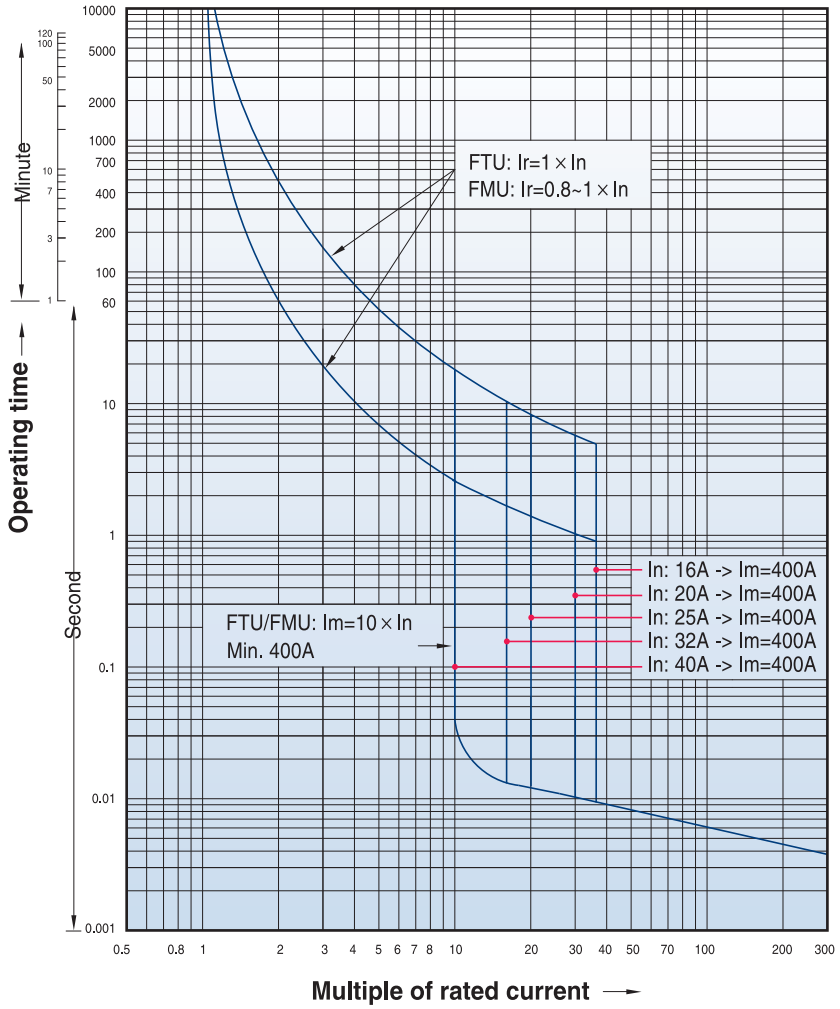

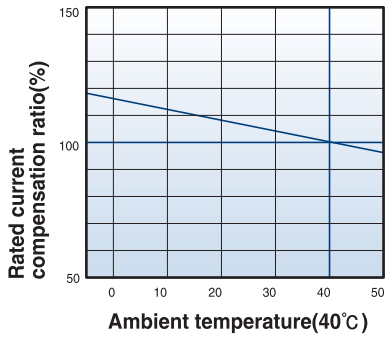

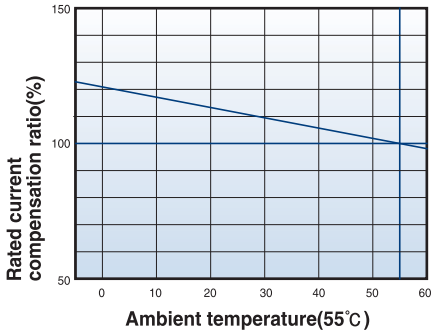

Circuit breakers with thermal-magnetic trip units

TD160

FTU

FMU

100~160A

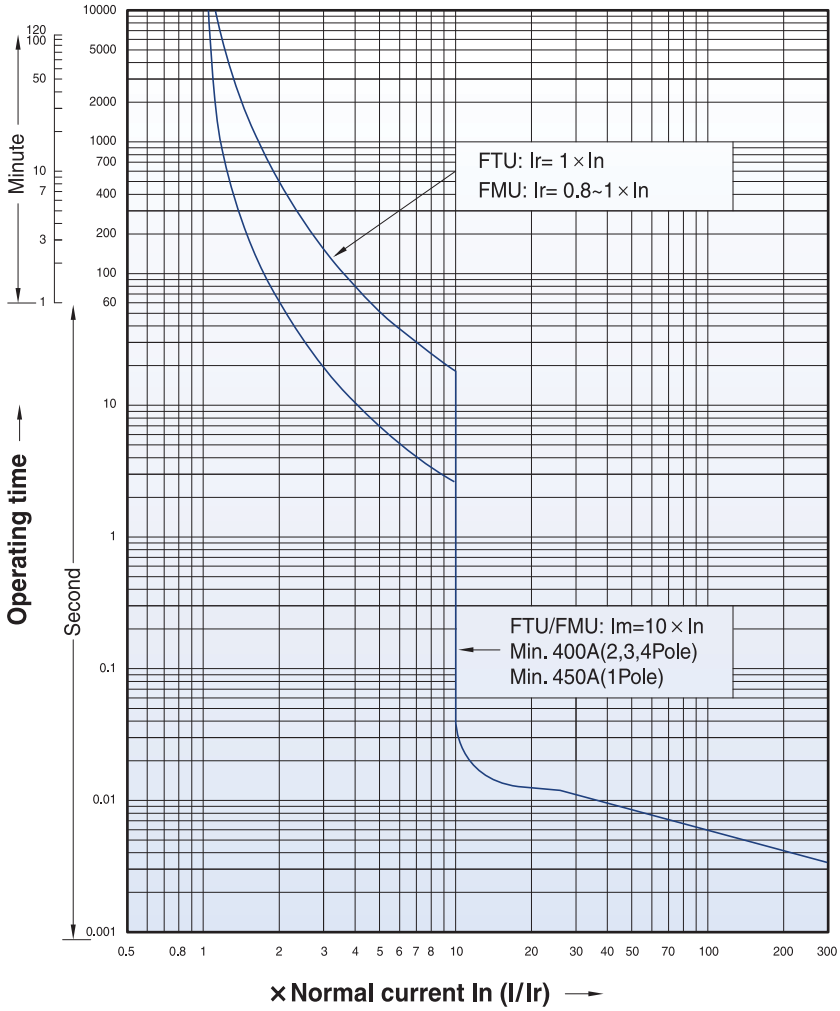

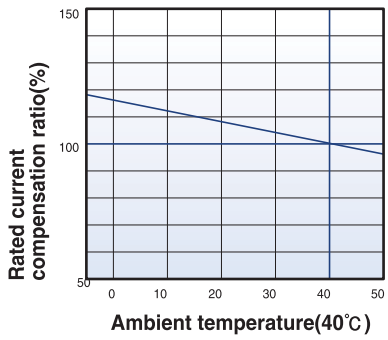

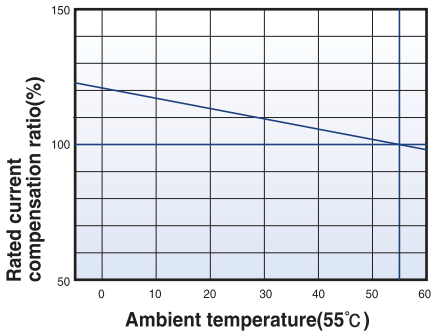

Circuit breakers with thermal-magnetic trip units

TS100

FTU
FMU
40~100A

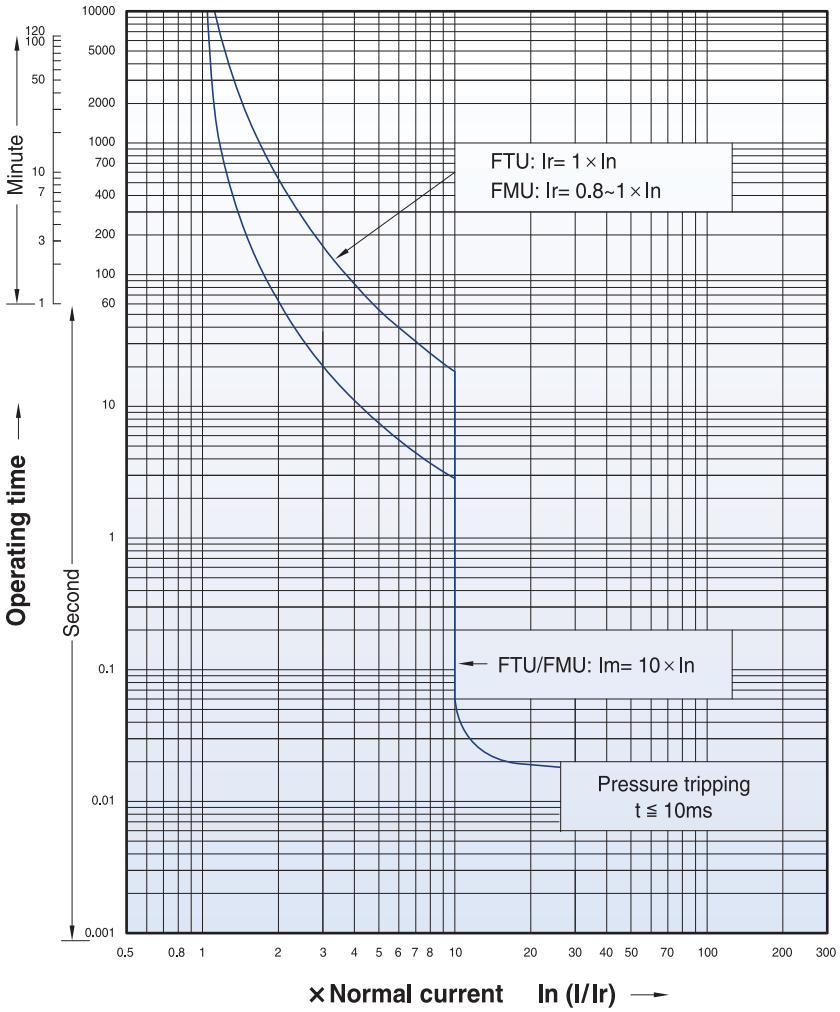

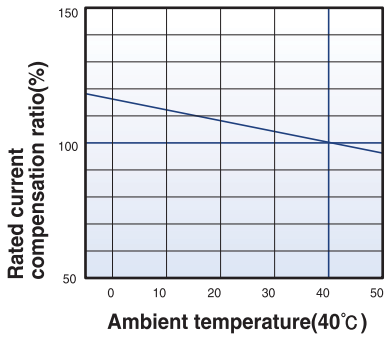

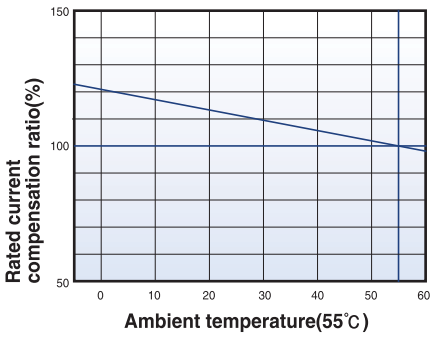

Characteristics curves

Susol

Circuit breakers with magnetic only trip units

TS100

Magnetic only
MTU
1.6~100A

TS160

Magnetic only
MTU
32~160A

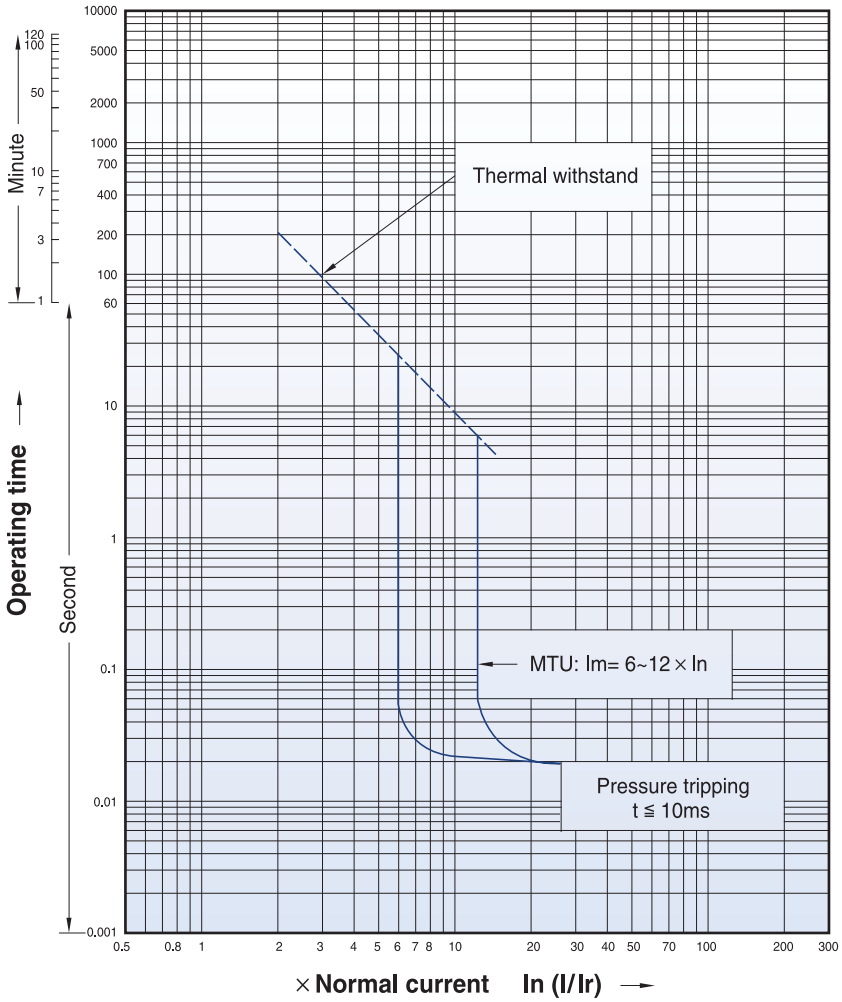

Magnetic trip units(MTU)

Rating(A)		In	TS100 to TS800													
			1.6	3.2	6.3	12	20	32	50	63	100	160	220	320	500	630
	N / H / L	TS100	●	●	●	●	●	●	●	●	●	-	-	-	-	-
		TS160	-	-	-	-	-	●	●	●	●	●	-	-	-	-
		TS250	-	-	-	-	-	-	-	-	●	●	●	-	-	-
		TS400	-	-	-	-	-	-	-	-	-	-	-	●	-	-
		TS630	-	-	-	-	-	-	-	-	-	-	-	-	●	-
		TS800	-	-	-	-	-	-	-	-	-	-	-	-	-	●

Short - circuit protection(magnetic)

Pick - up	Im	Setting
		6..12 × In (6 Point)

Circuit breakers with thermal-magnetic trip units

TS160

FTU

FMU

100, 125, 160A

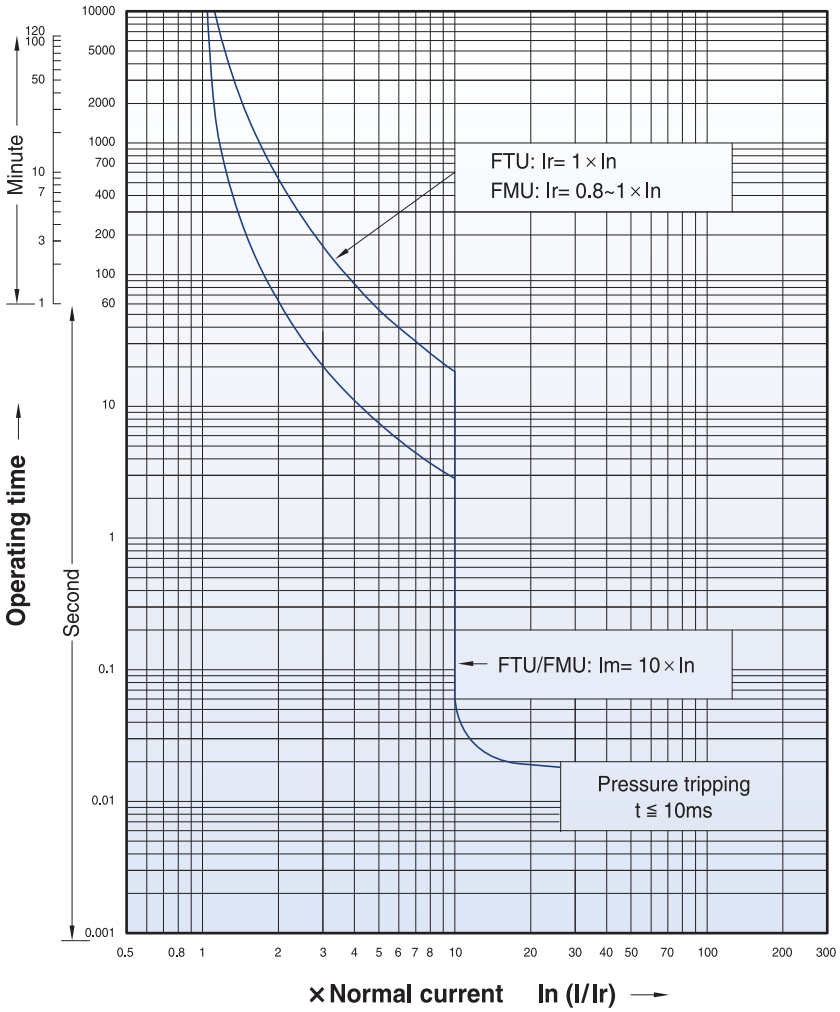

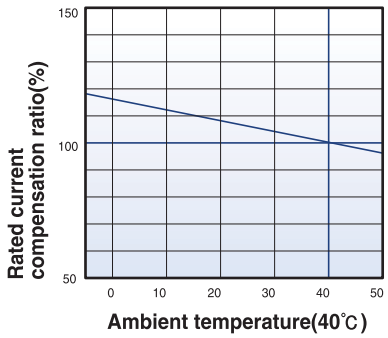

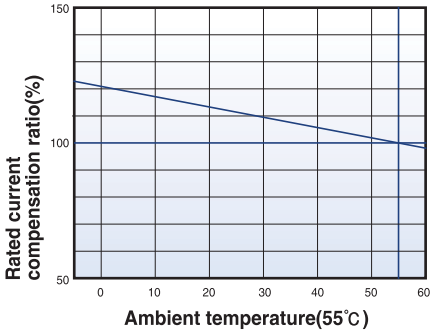

Characteristics curves

Susol

Circuit breakers with thermal-magnetic trip units

TS160

ATU

100, 125, 160A

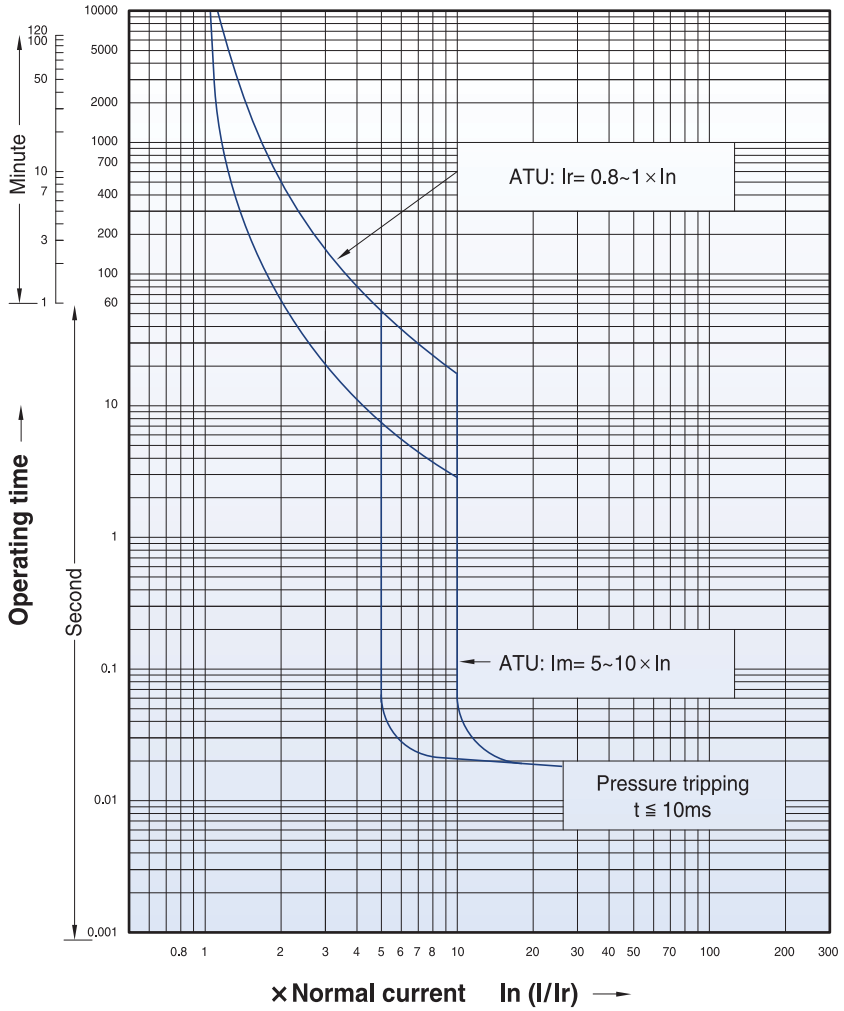

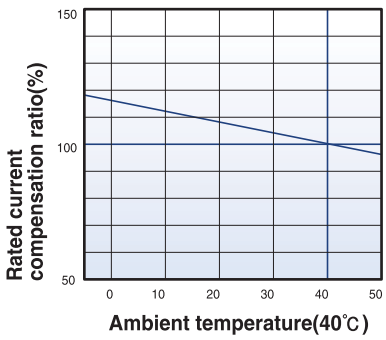

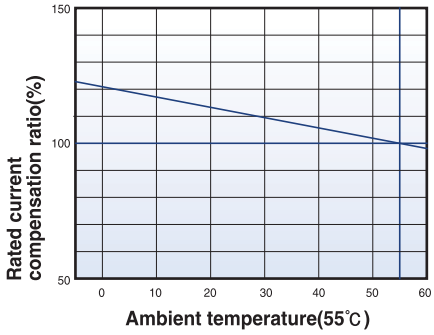

Circuit breakers with thermal-magnetic trip units

TS250

FTU
FMU
125~250A

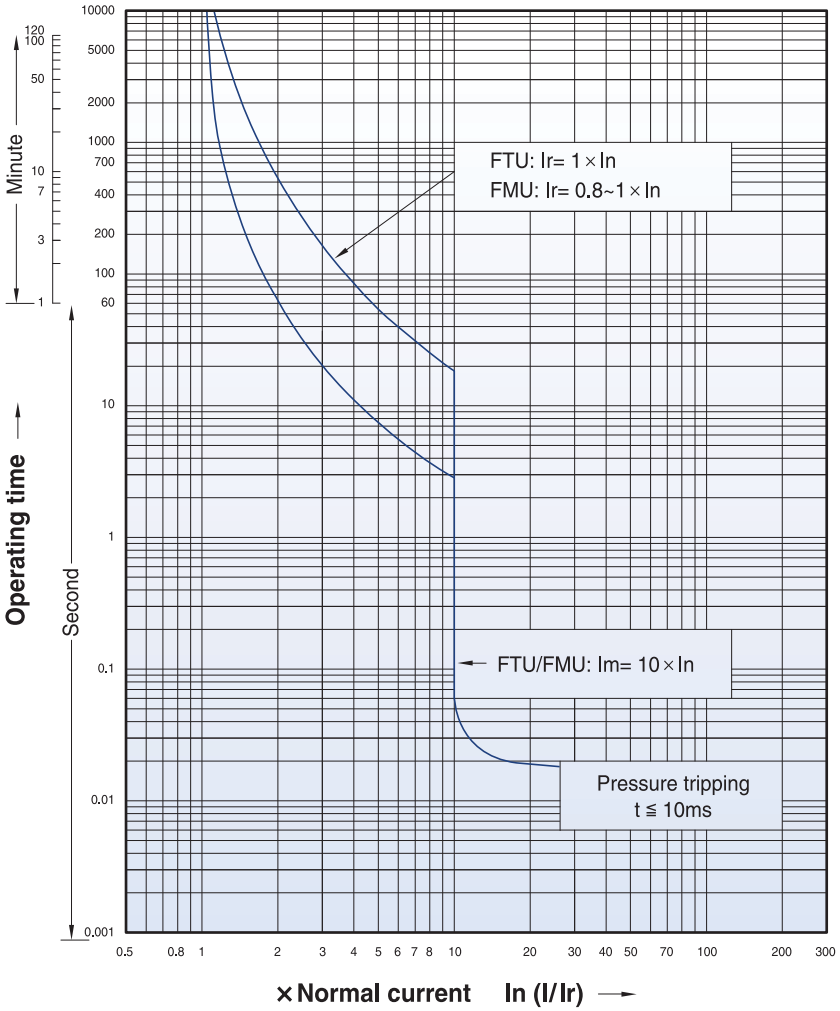

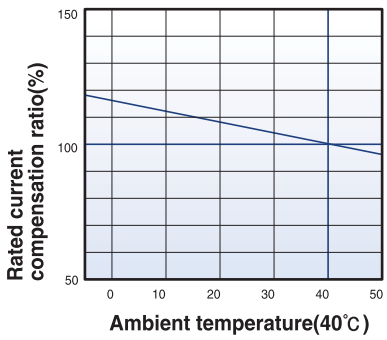

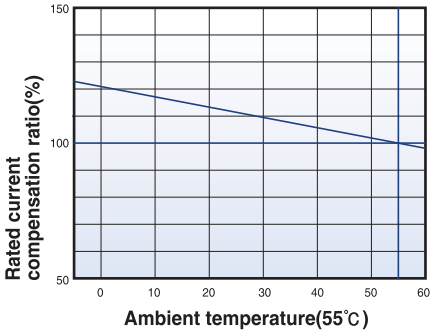

Characteristics curves

Susol

Circuit breakers with thermal-magnetic trip units

TS250

ATU

125~250A

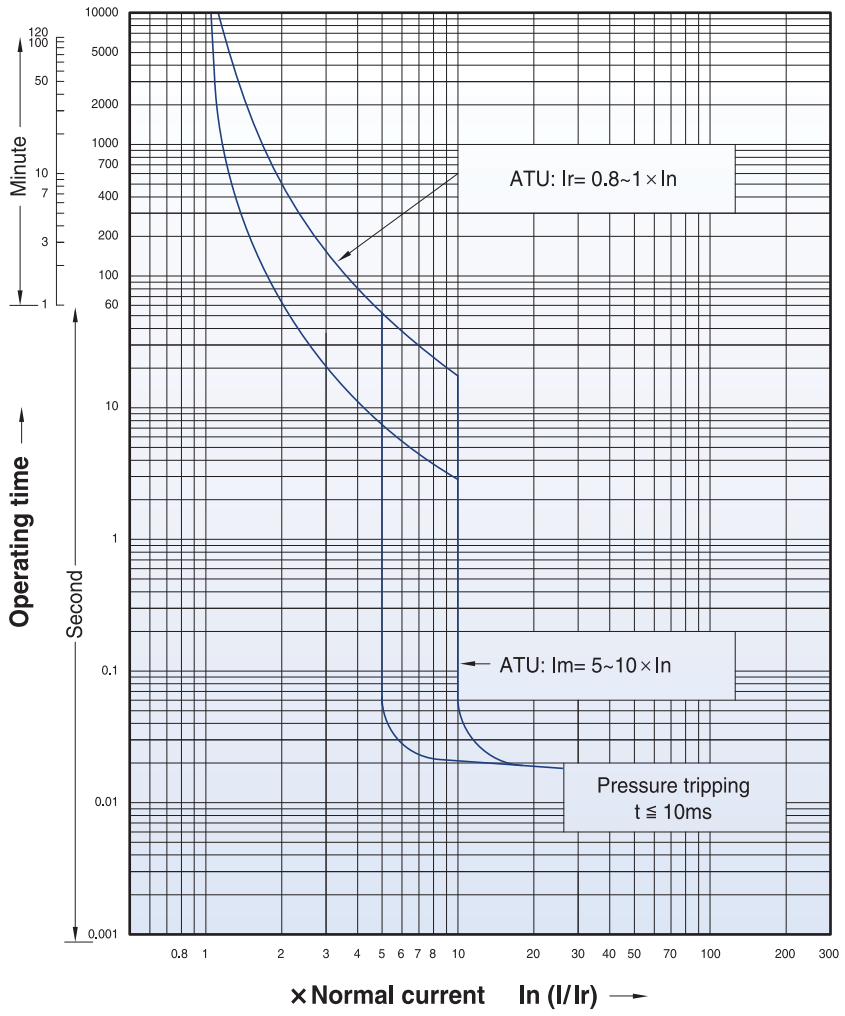

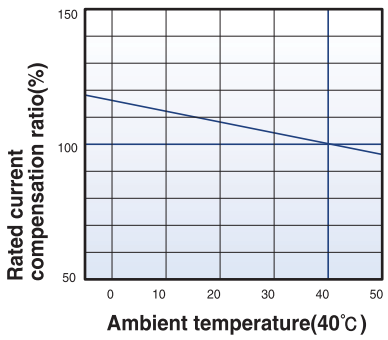

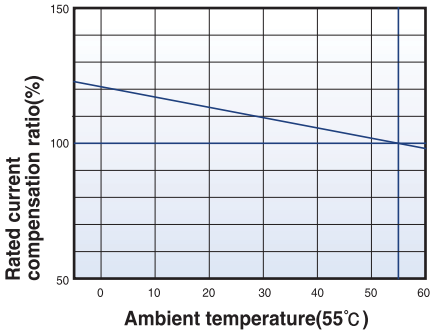

Circuit breakers with magnetic only trip units

TS250

Magnetic only
MTU
100, 160, 220A

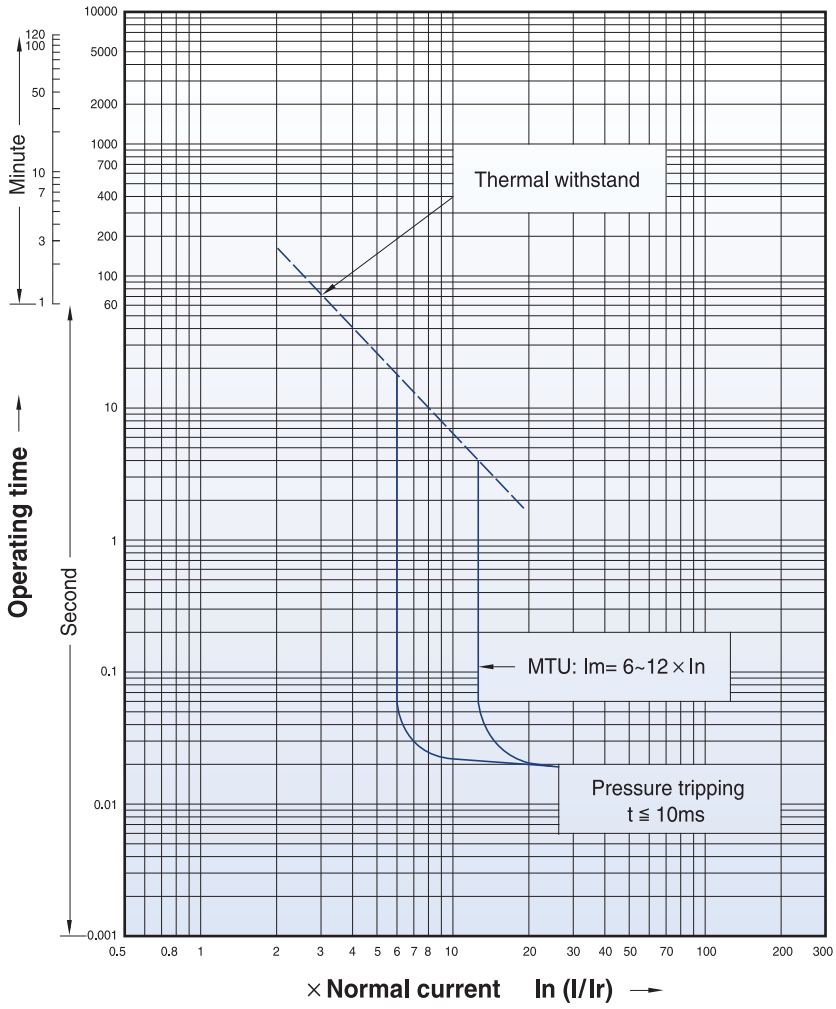

Magnetic trip units(MTU)

Rating(A)		In	TS100 to TS800													
			1.6	3.2	6.3	12	20	32	50	63	100	160	220	320	500	630
	N / H / L	TS100	●	●	●	●	●	●	●	●	●	-	-	-	-	-
		TS160	-	-	-	-	-	●	●	●	●	●	-	-	-	-
		TS250	-	-	-	-	-	-	-	-	●	●	●	-	-	-
		TS400	-	-	-	-	-	-	-	-	-	-	-	●	-	-
		TS630	-	-	-	-	-	-	-	-	-	-	-	-	●	-
		TS800	-	-	-	-	-	-	-	-	-	-	-	-	-	●

Short - circuit protection(magnetic)

Pick - up	Im	Setting
		6..12×In (6 Point)

Circuit breakers with thermal-magnetic trip units

TS400

FTU

FMU

300, 400A

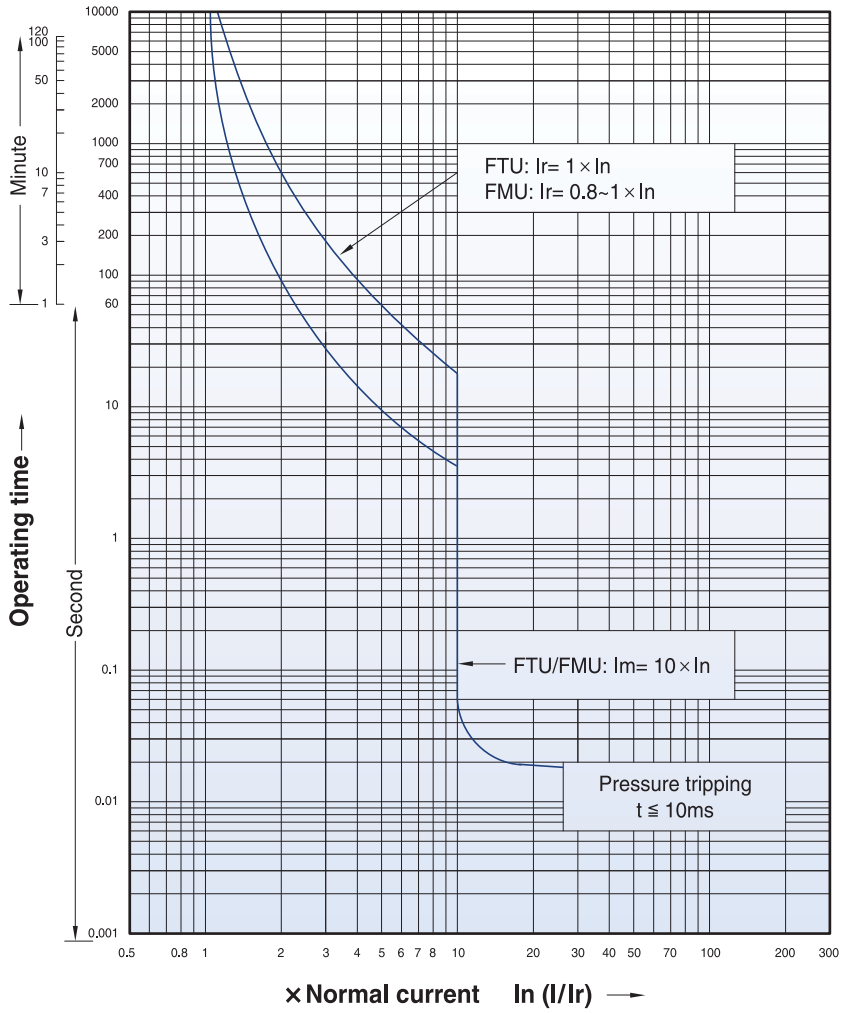

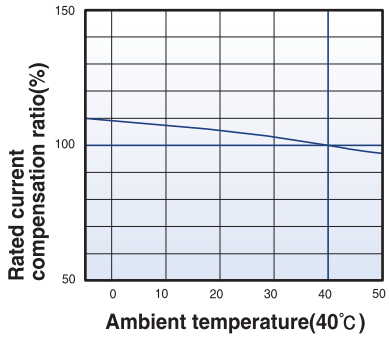

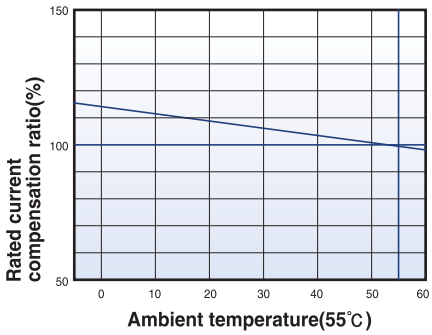

Circuit breakers with thermal-magnetic trip units

TS400

ATU

300, 400A

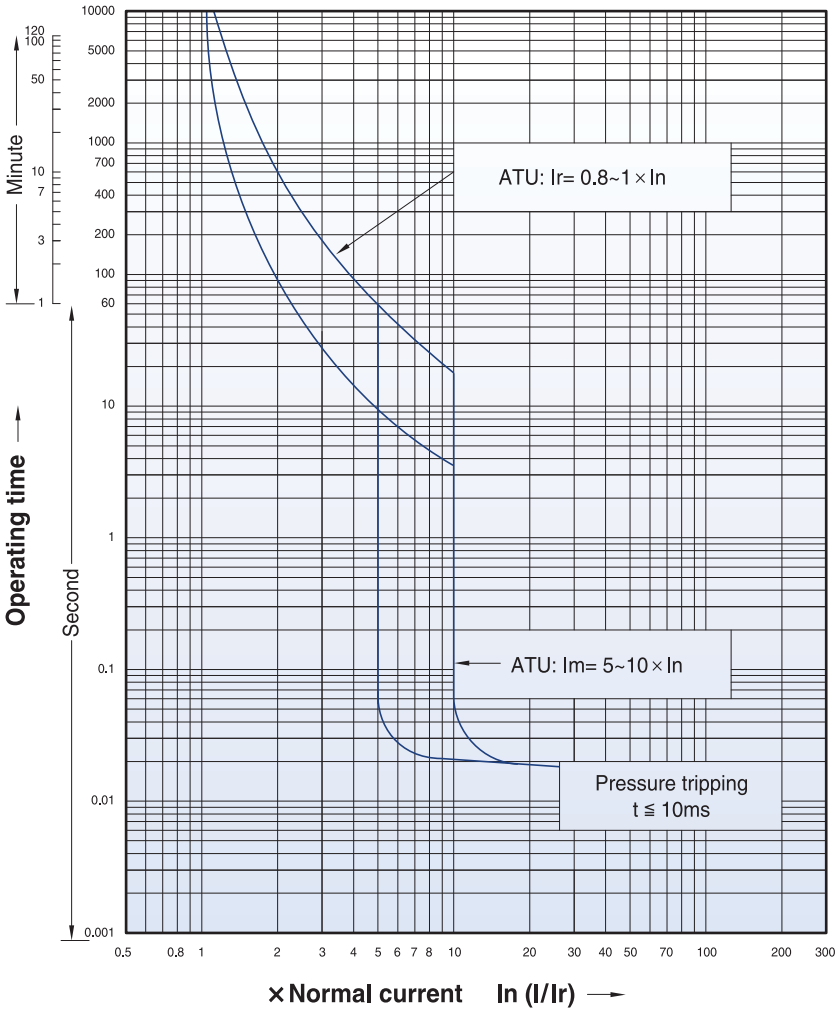

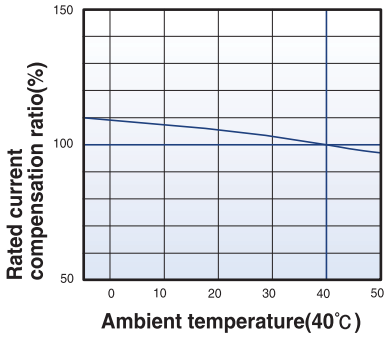

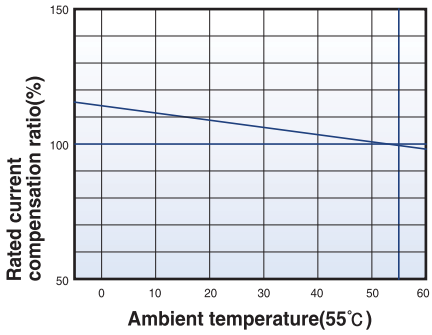

Circuit breakers with magnetic only trip units

TS400

MTU

320A

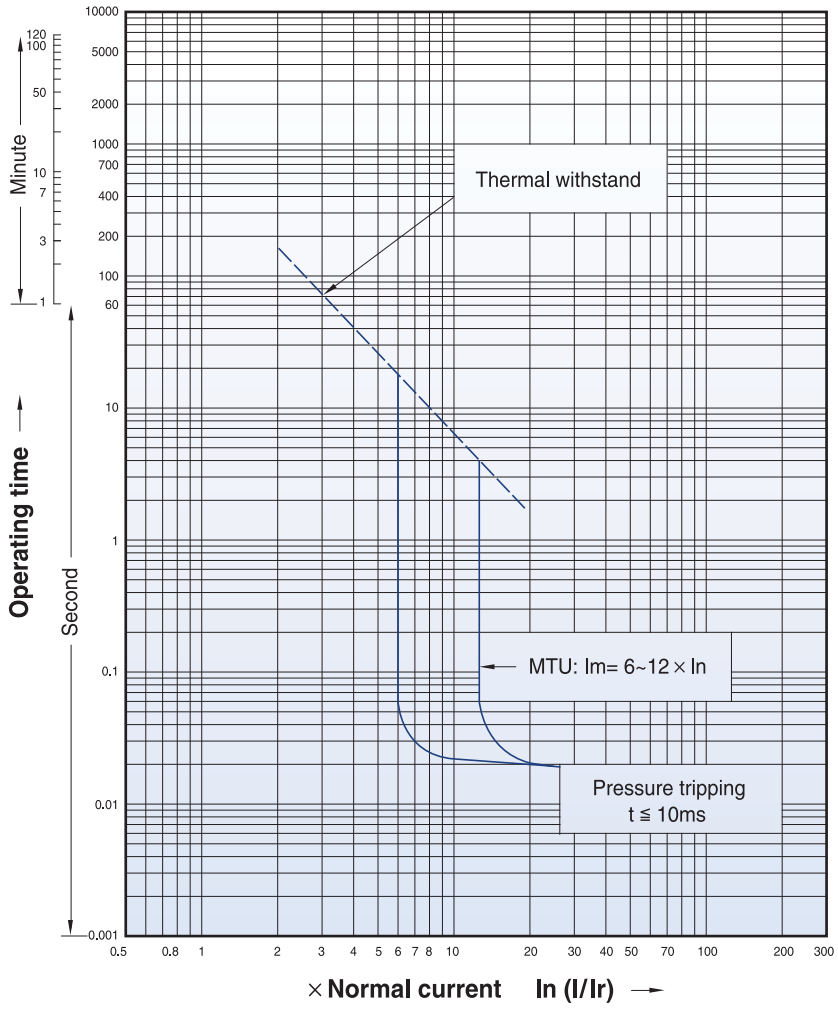

Magnetic trip units(MTU)

Rating(A)		In	TS100 to TS800													
			1.6	3.2	6.3	12	20	32	50	63	100	160	220	320	500	630
	N / H / L	TS100	●	●	●	●	●	●	●	●	●	-	-	-	-	-
		TS160	-	-	-	-	-	●	●	●	●	●	-	-	-	-
		TS250	-	-	-	-	-	-	-	-	●	●	●	-	-	-
		TS400	-	-	-	-	-	-	-	-	-	-	-	●	-	-
		TS630	-	-	-	-	-	-	-	-	-	-	-	-	●	-
		TS800	-	-	-	-	-	-	-	-	-	-	-	-	-	●

Short - circuit protection(magnetic)

Pick - up	Im	Setting
		6..12×In (6 Point)

Circuit breakers with thermal-magnetic trip units

TS630

FTU

FMU

500, 630A

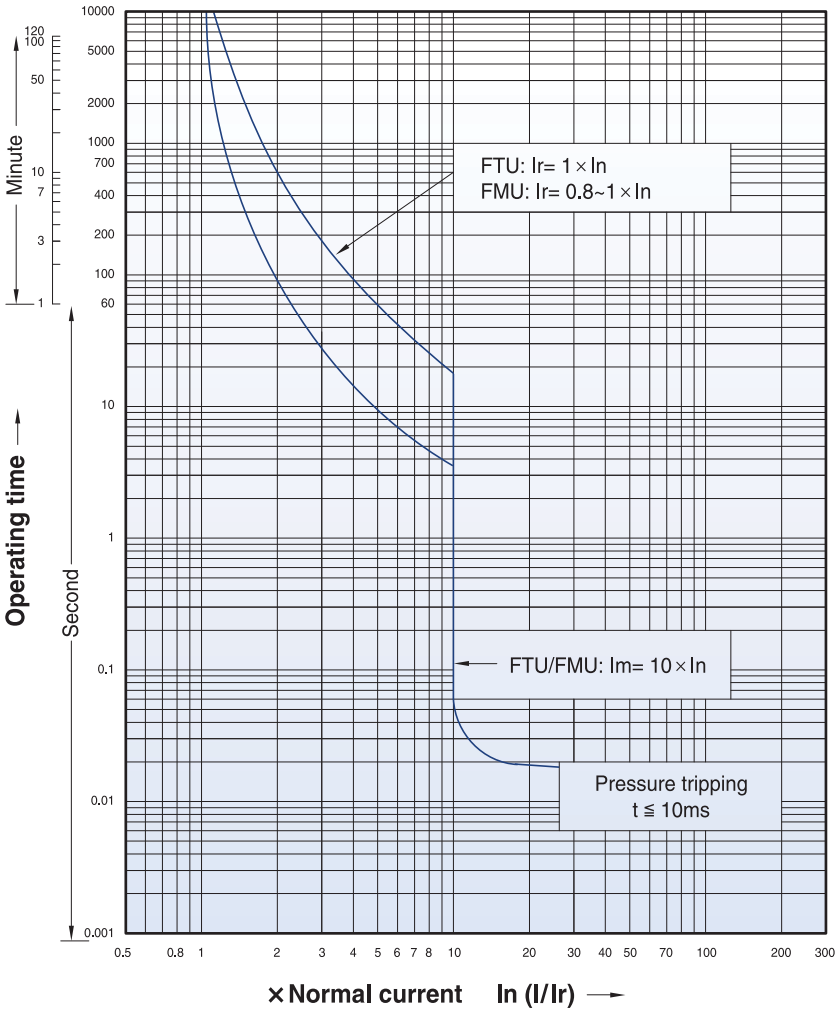

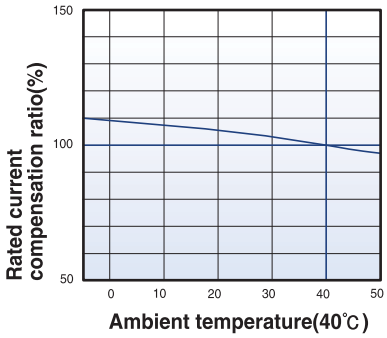

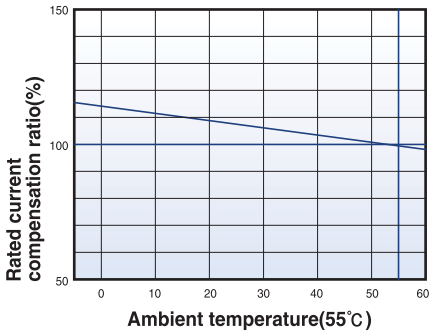

Circuit breakers with thermal-magnetic trip units

TS630

ATU

500, 630A

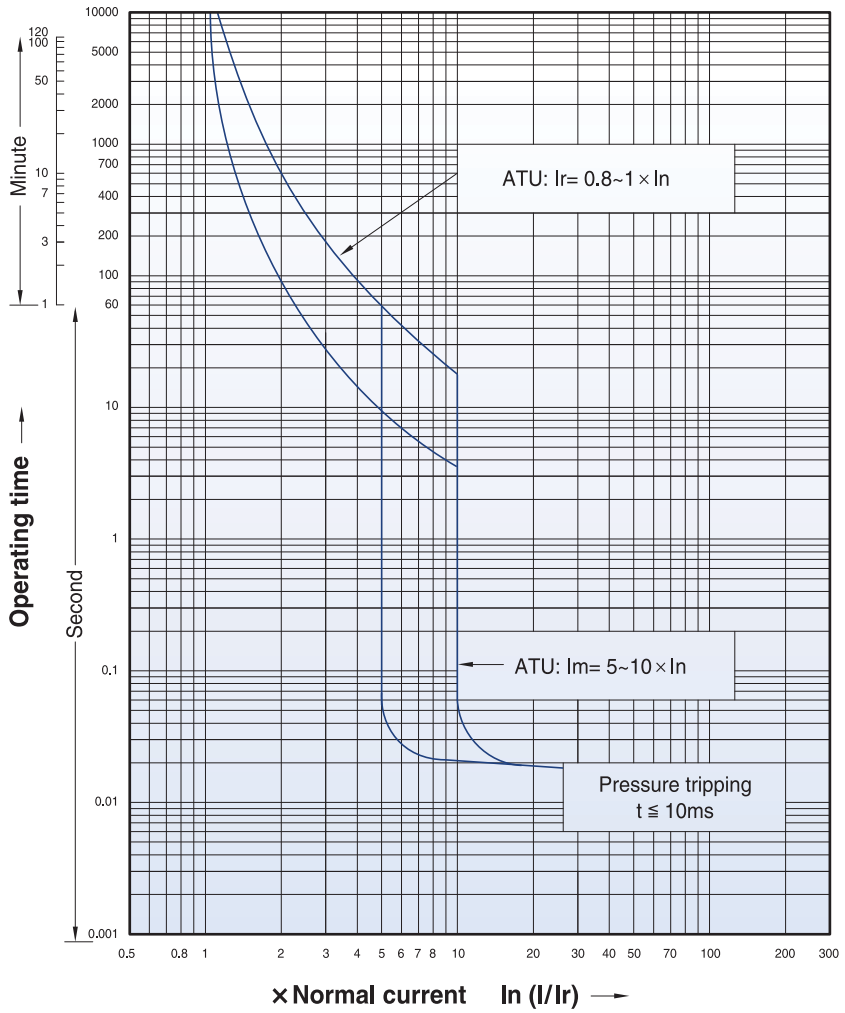

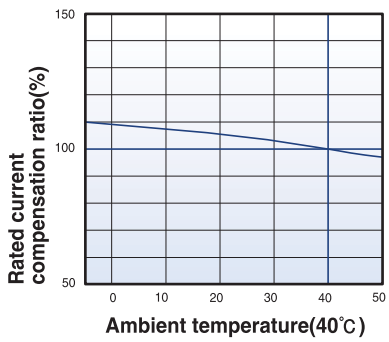

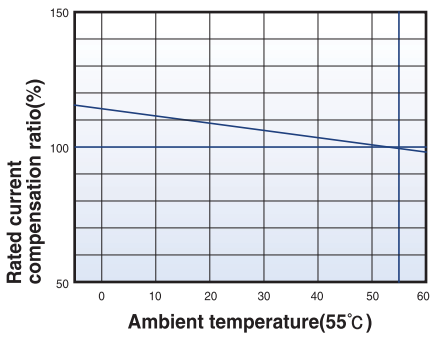

Circuit breakers with magnetic only trip units

TS630

MTU

500A

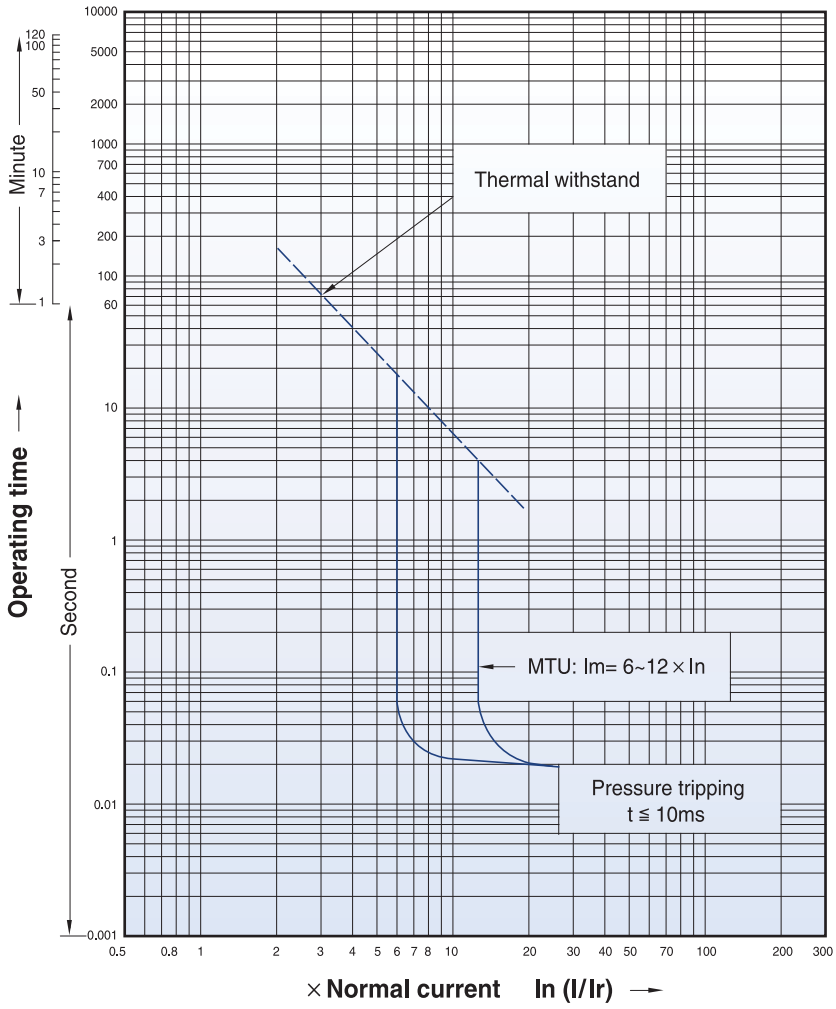

Magnetic trip units(MTU)

Rating(A)		In	TS100 to TS800													
			1.6	3.2	6.3	12	20	32	50	63	100	160	220	320	500	630
	N / H / L	TS100	●	●	●	●	●	●	●	●	●	-	-	-	-	-
		TS160	-	-	-	-	-	●	●	●	●	●	-	-	-	-
		TS250	-	-	-	-	-	-	-	-	●	●	●	-	-	-
		TS400	-	-	-	-	-	-	-	-	-	-	-	●	-	-
		TS630	-	-	-	-	-	-	-	-	-	-	-	-	●	-
		TS800	-	-	-	-	-	-	-	-	-	-	-	-	-	●

Short - circuit protection(magnetic)

Pick - up	Im	Setting
		6..12×In (6 Point)

Circuit breakers with thermal-magnetic trip units

TS800

FTU
700, 800A

FMU
800A

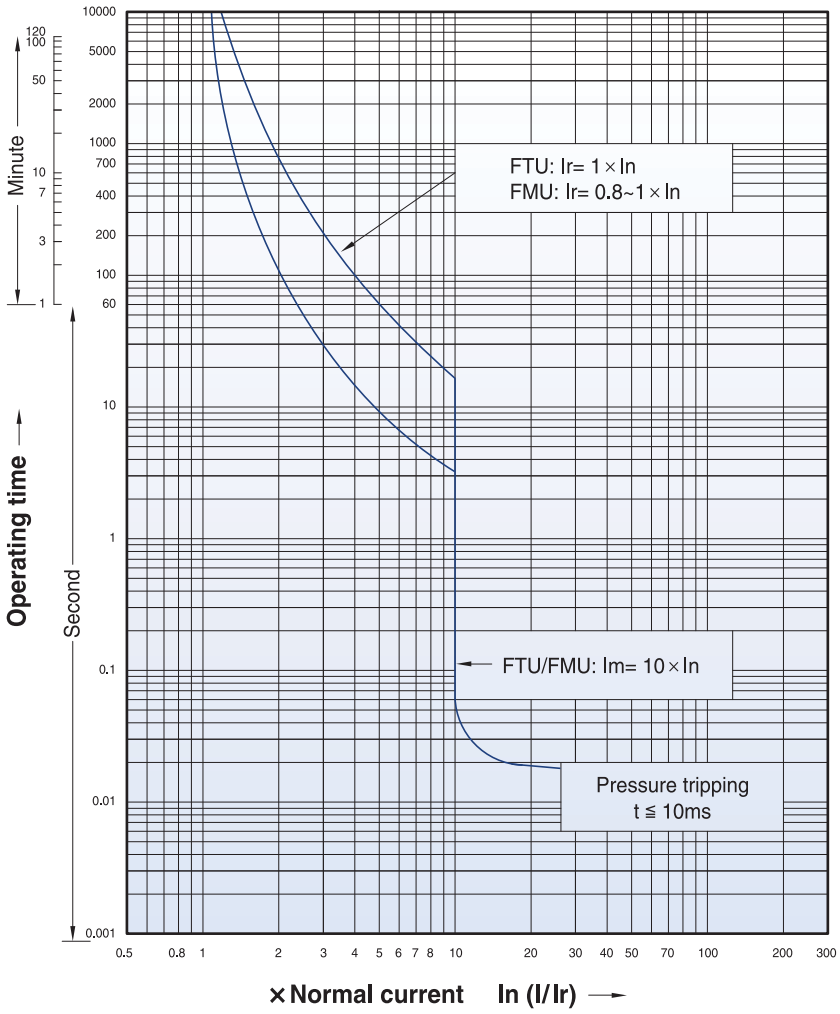

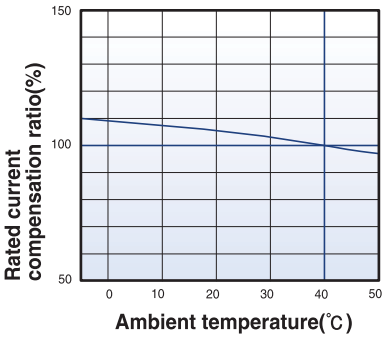

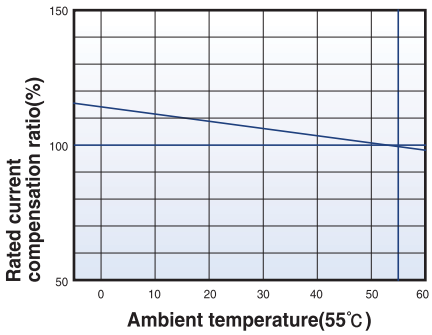

Circuit breakers with thermal-magnetic trip units

TS800

ATU

800A

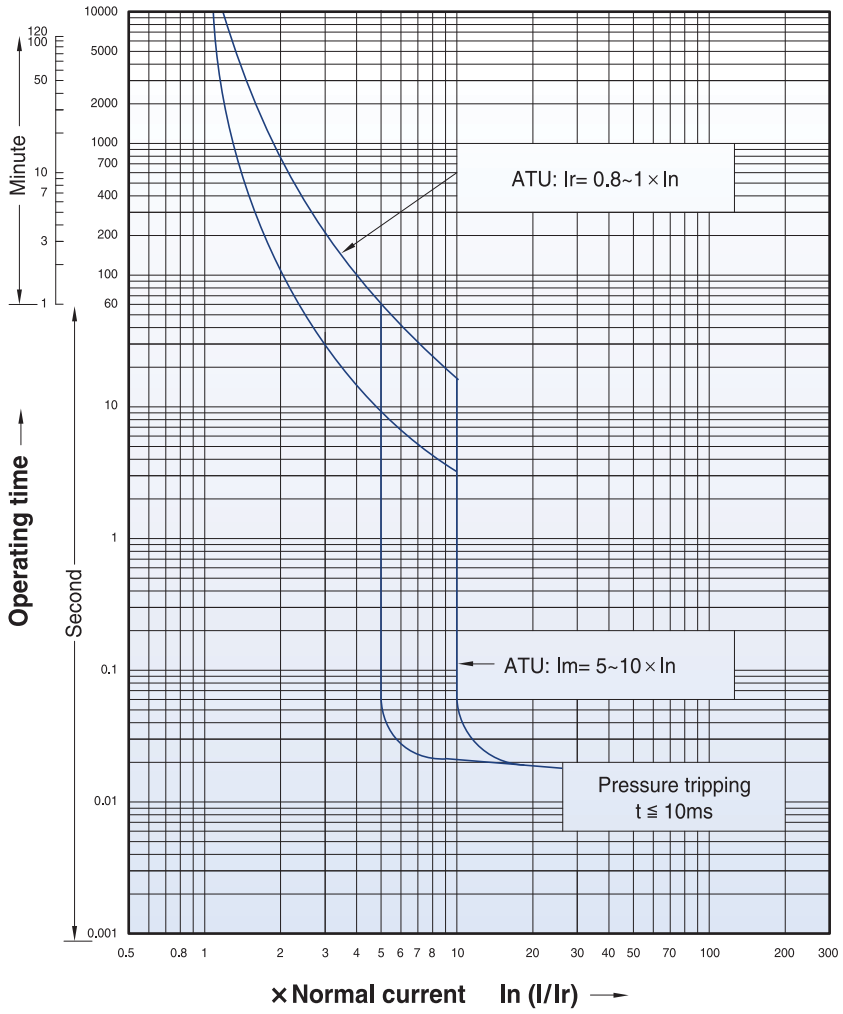

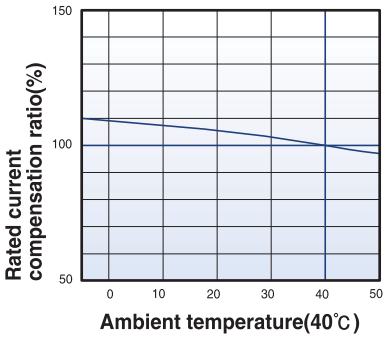

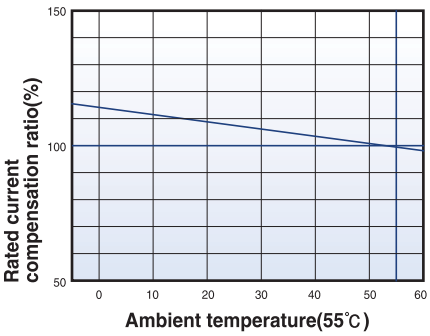

Circuit breakers with magnetic only trip units

TS800

MTU

630A

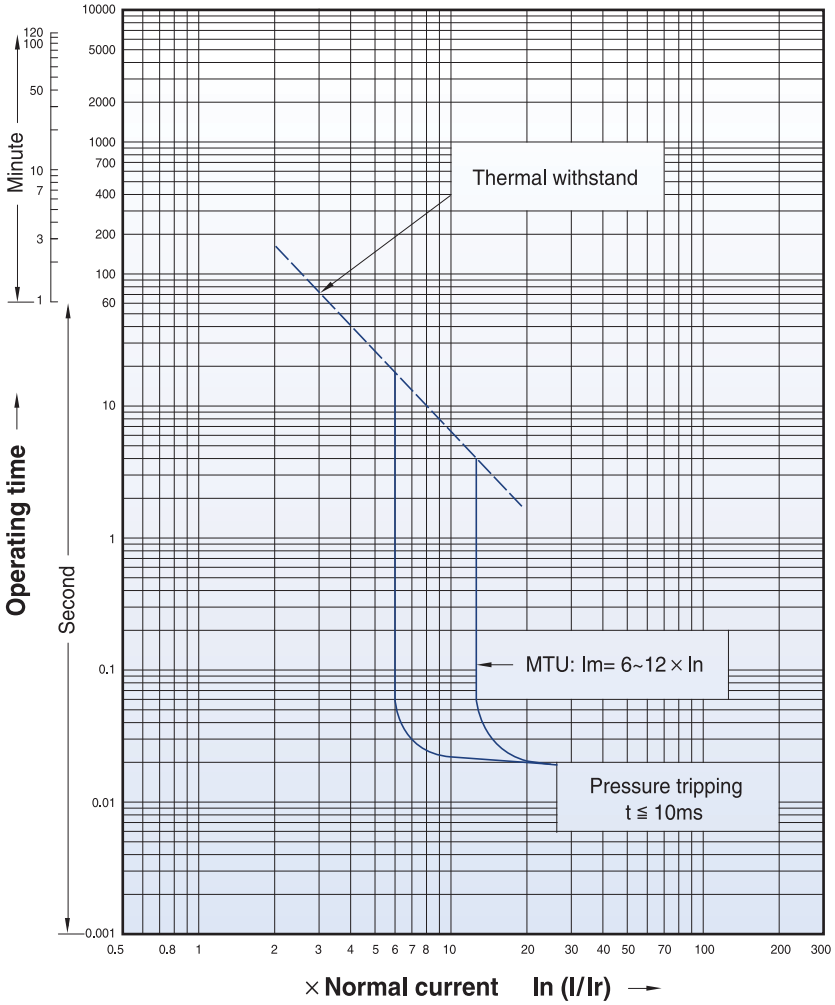

Magnetic trip units(MTU)

Rating(A)		In	TS100 to TS800													
			1.6	3.2	6.3	12	20	32	50	63	100	160	220	320	500	630
	N / H / L	TS100	●	●	●	●	●	●	●	●	●	-	-	-	-	-
		TS160	-	-	-	-	-	●	●	●	●	●	-	-	-	-
		TS250	-	-	-	-	-	-	-	-	●	●	●	-	-	-
		TS400	-	-	-	-	-	-	-	-	-	-	-	●	-	-
		TS630	-	-	-	-	-	-	-	-	-	-	-	-	●	-
		TS800	-	-	-	-	-	-	-	-	-	-	-	-	-	●

Short - circuit protection(magnetic)

Pick - up	Im	Setting
		6..12×In (6 Point)

Circuit breakers with electronic trip unit (ETS)

TS100 to TS800

ETS23
ETS33
ETS43

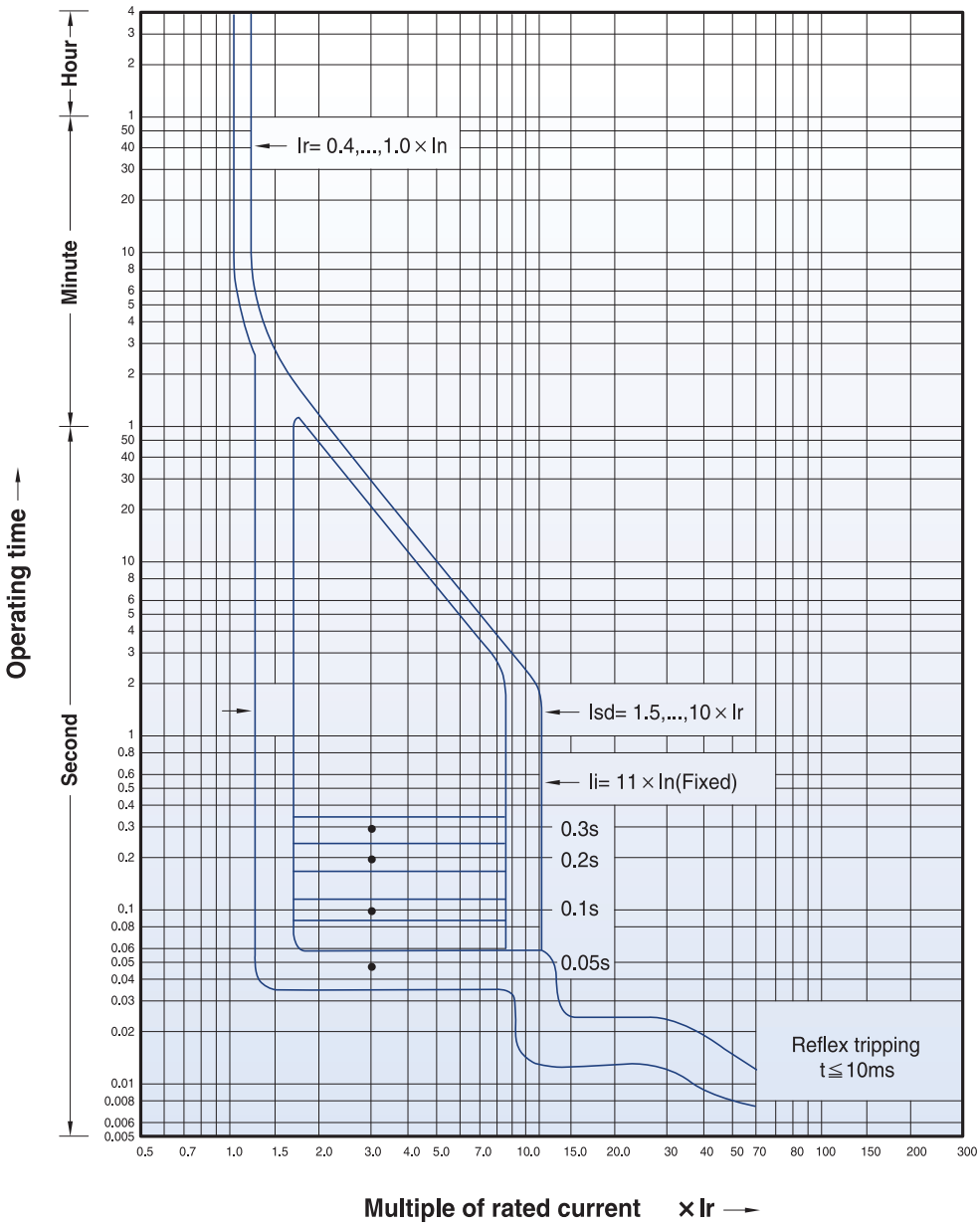

Circuit breakers with electronic trip unit (ETM)

TS400
TS630
TS800
ETM33
ETM43

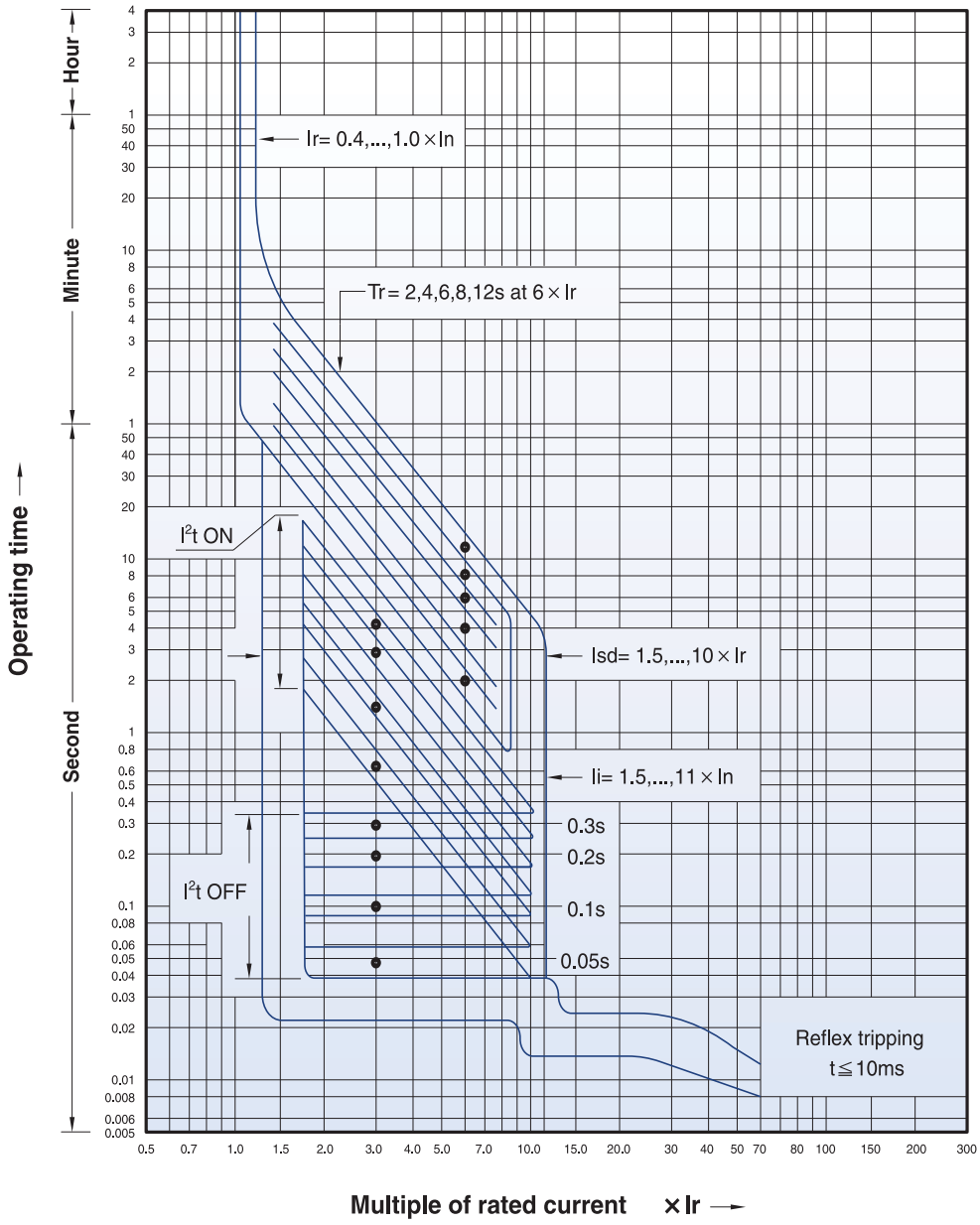

Long-time delay (L)

TS1600

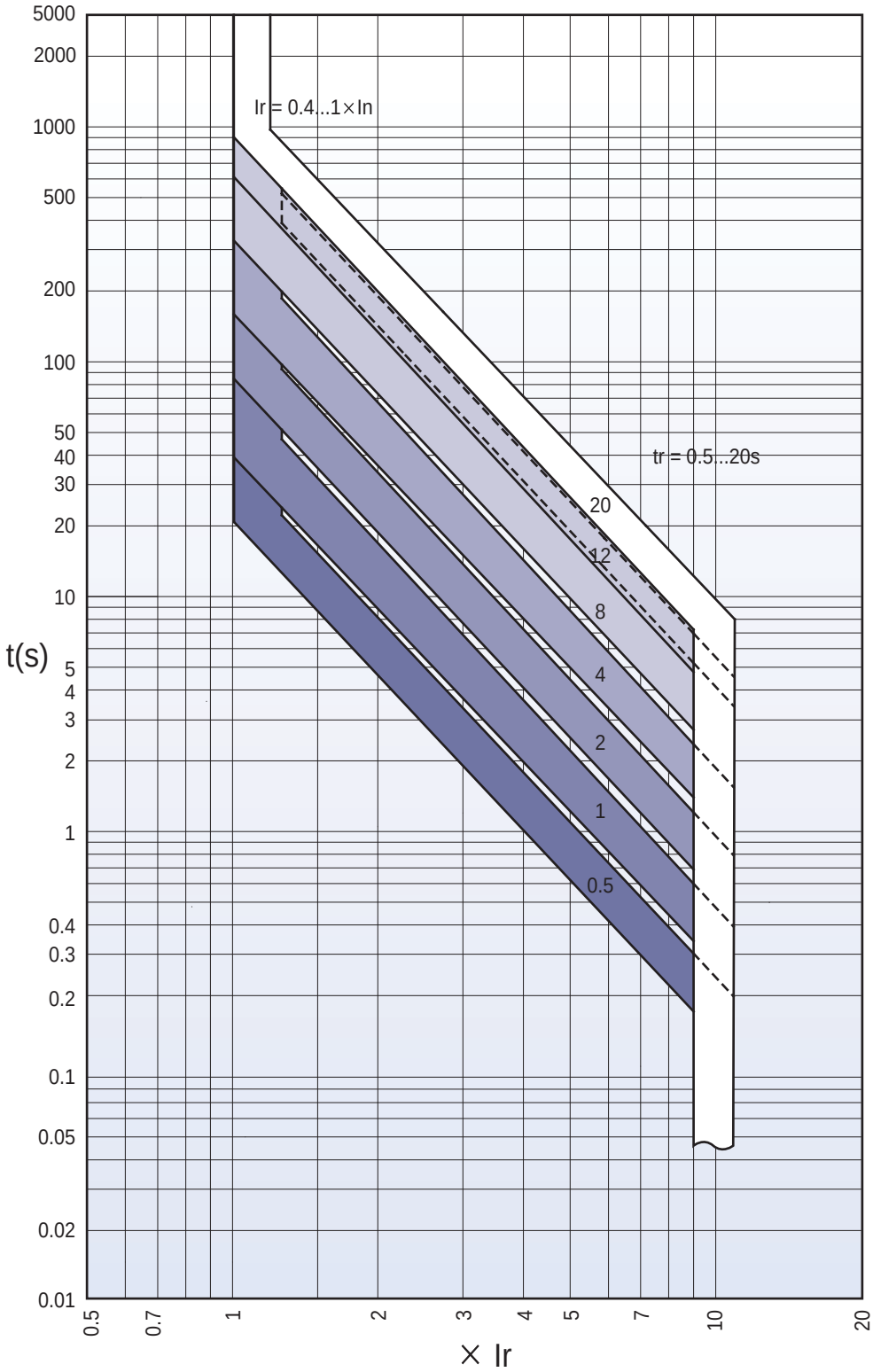

Short-time delay (S)

TS1600

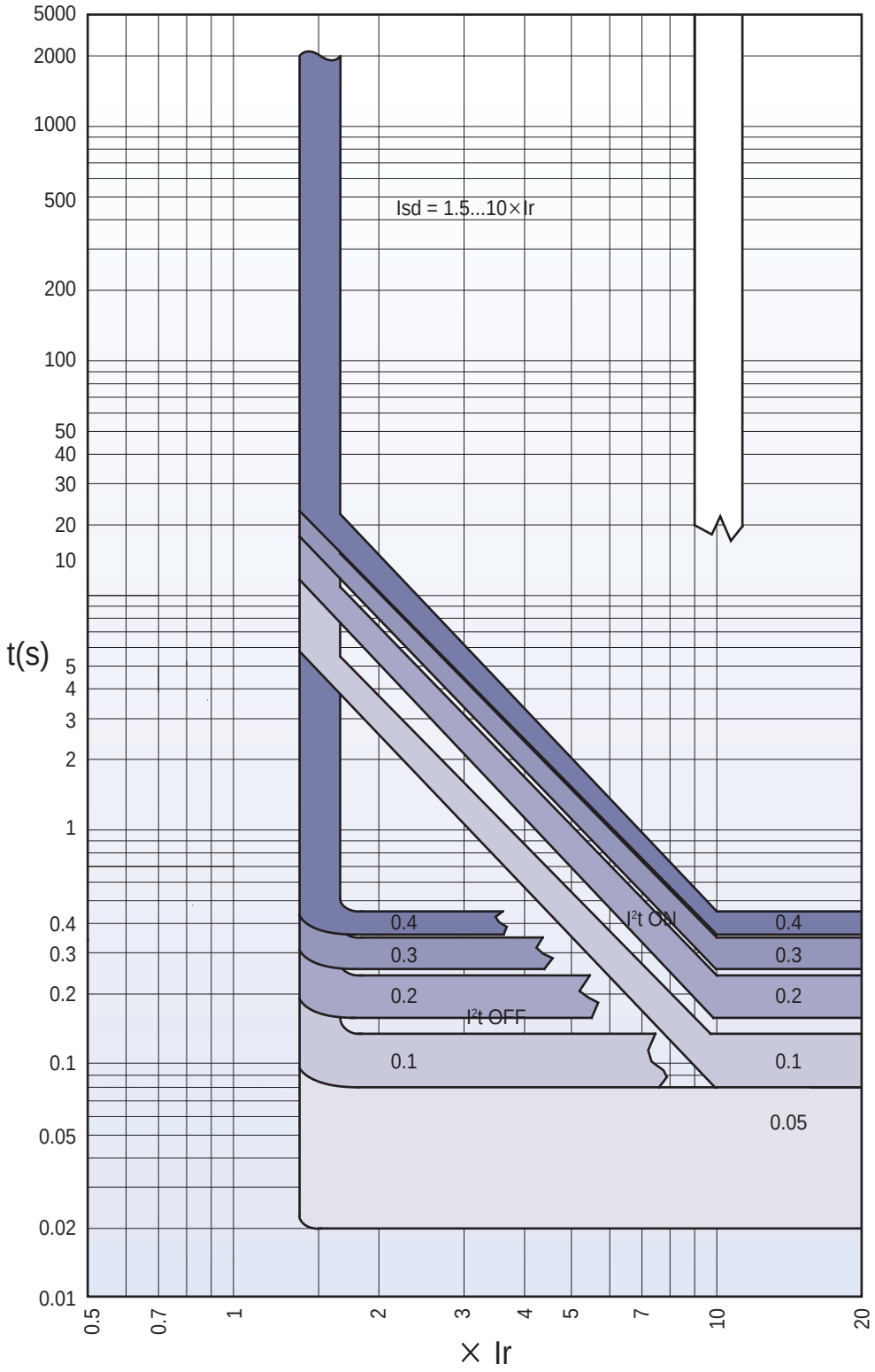

Instantaneous (I)
Ground fault (G)

TS1600

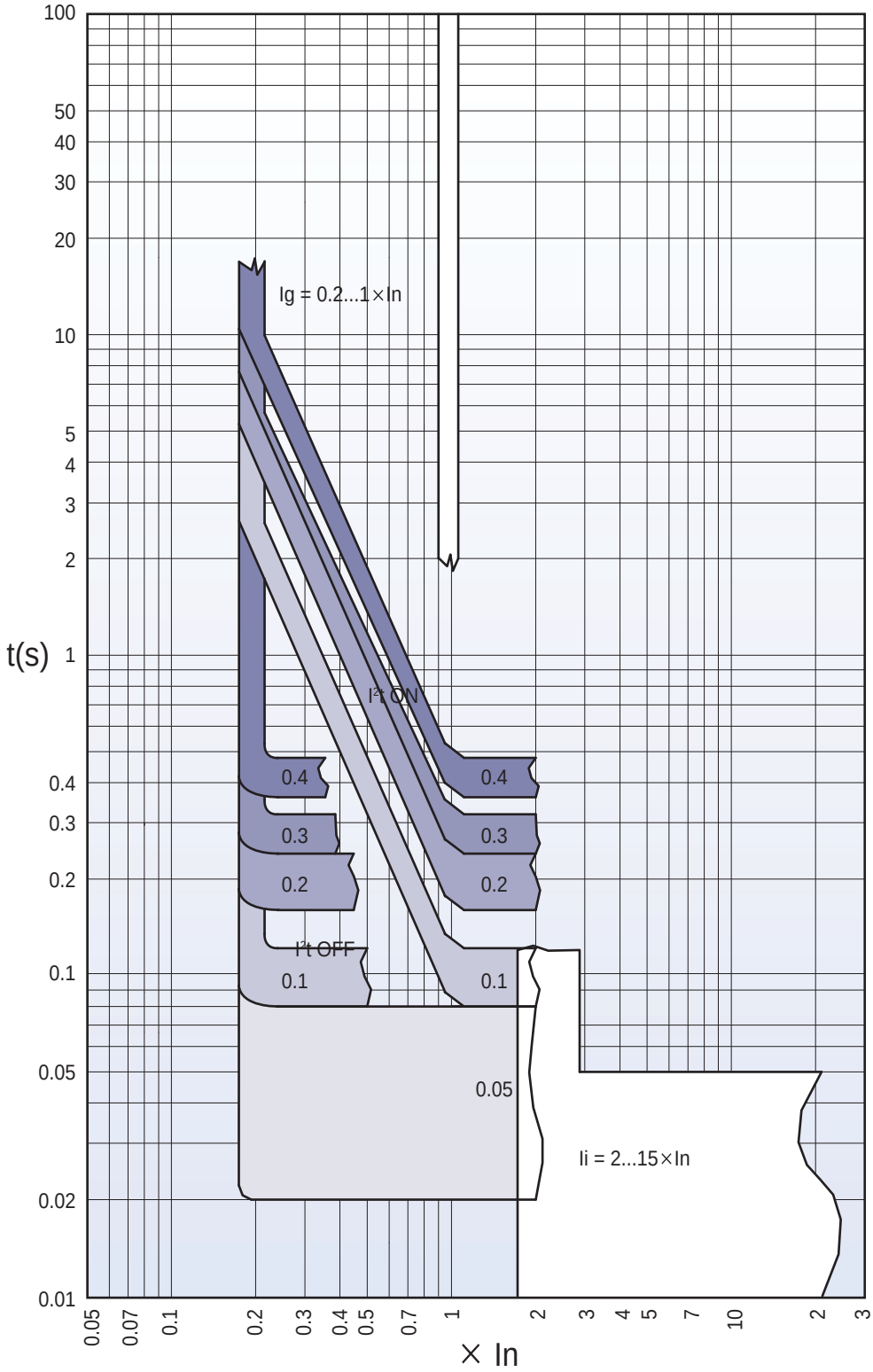

IDMTL

TS1600

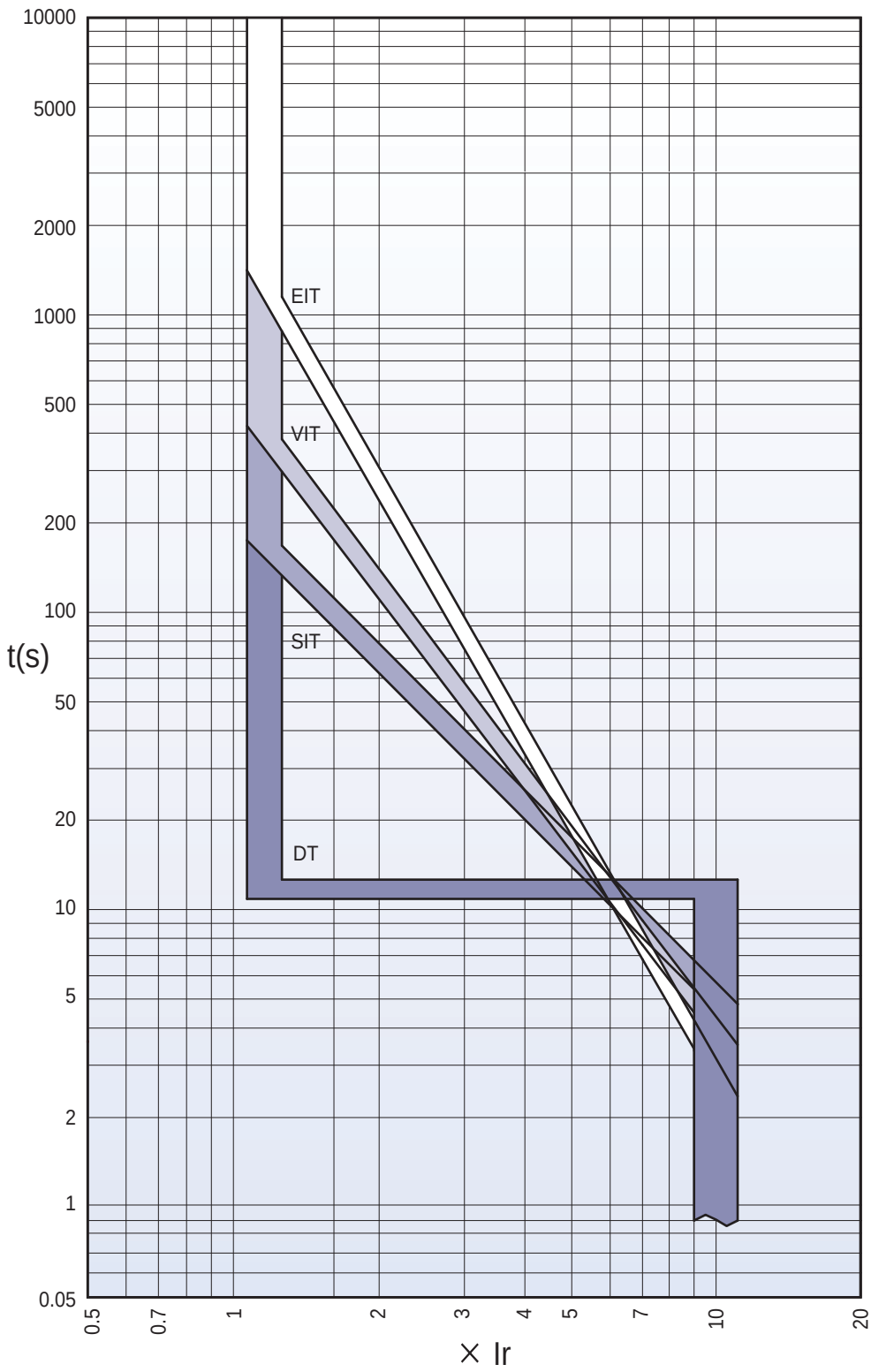

Pre Trip Alarm

TS1600

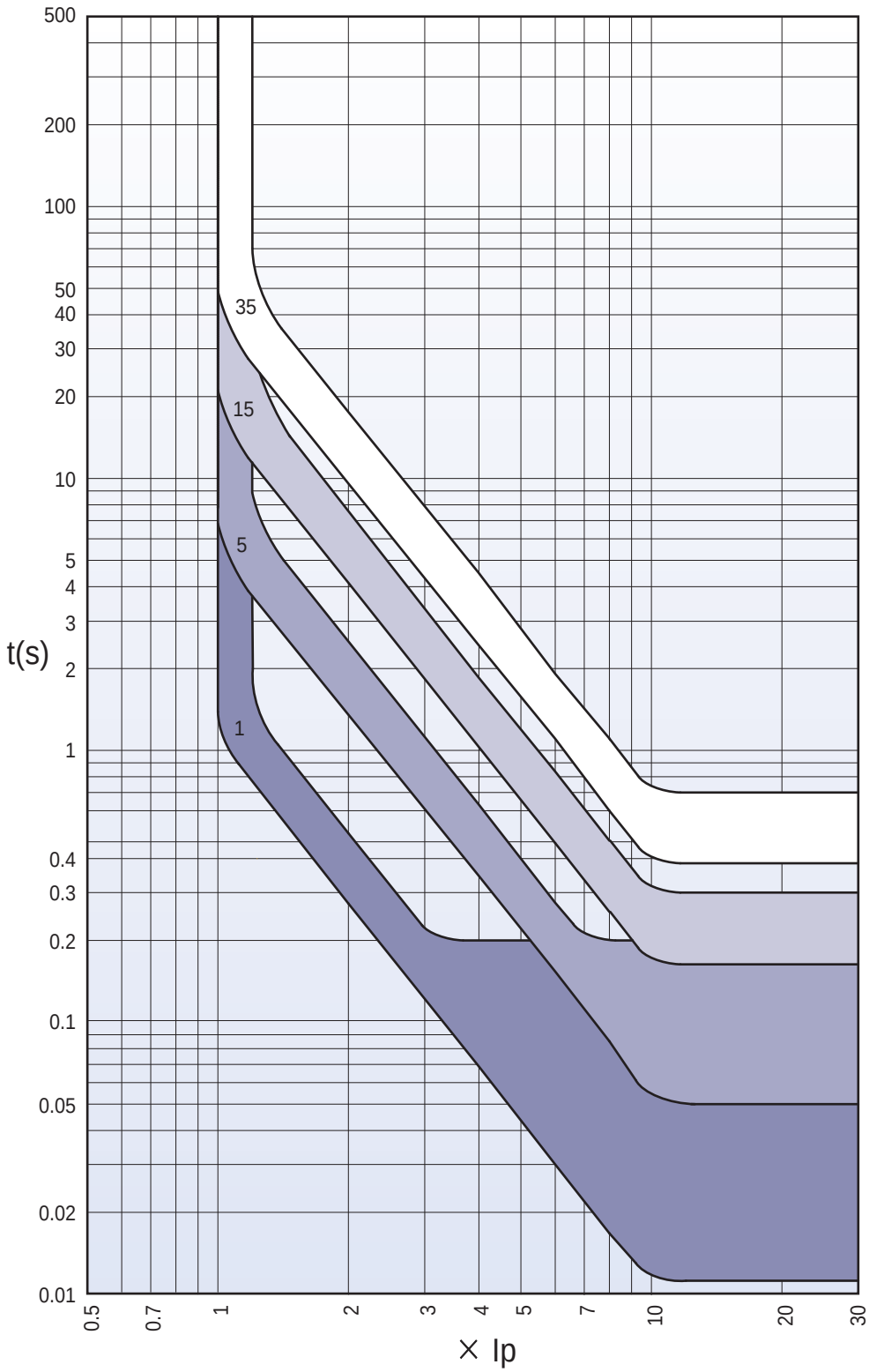

Specific let-through energy curves

220/240V

Thermal stress

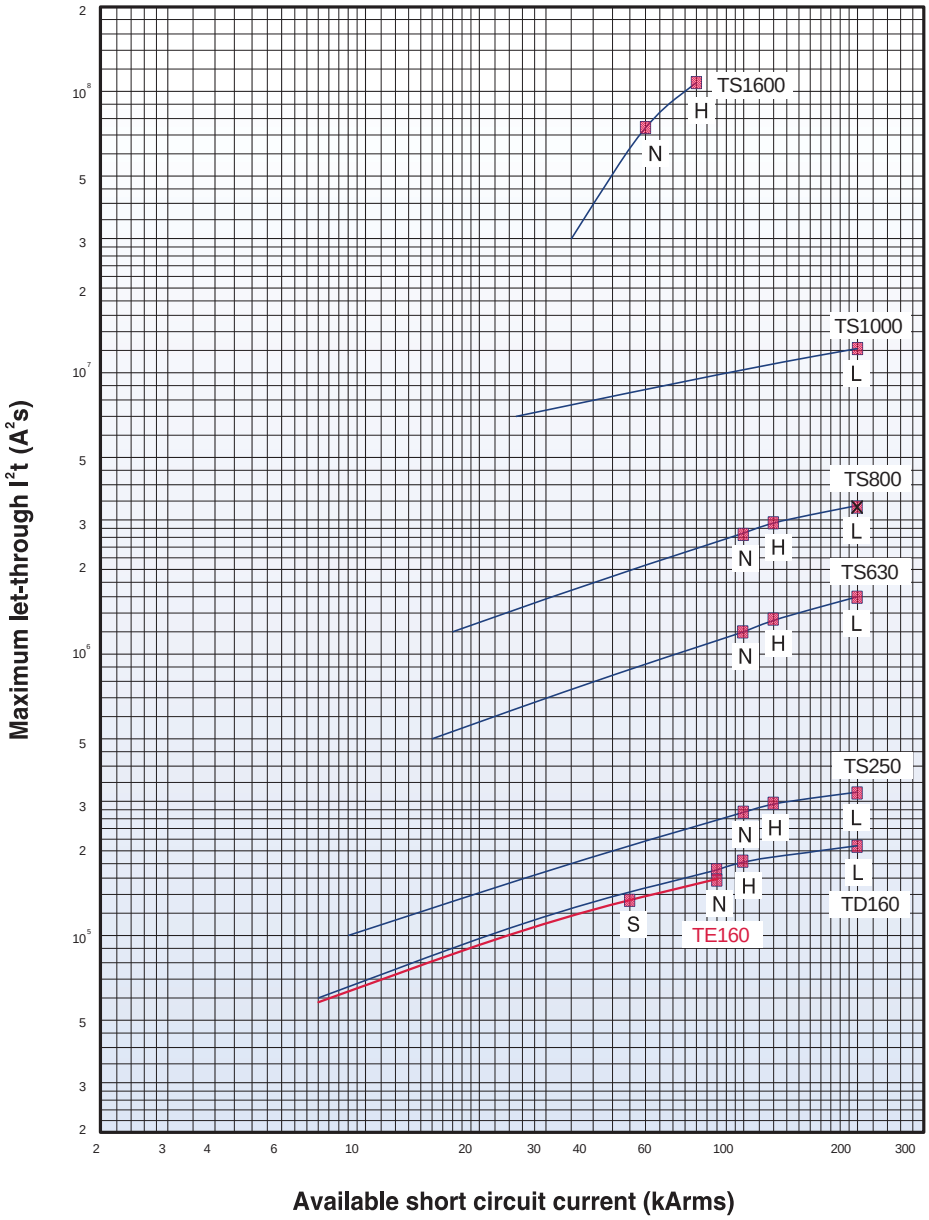

Specific let-through energy curves

380/415V

Thermal stress

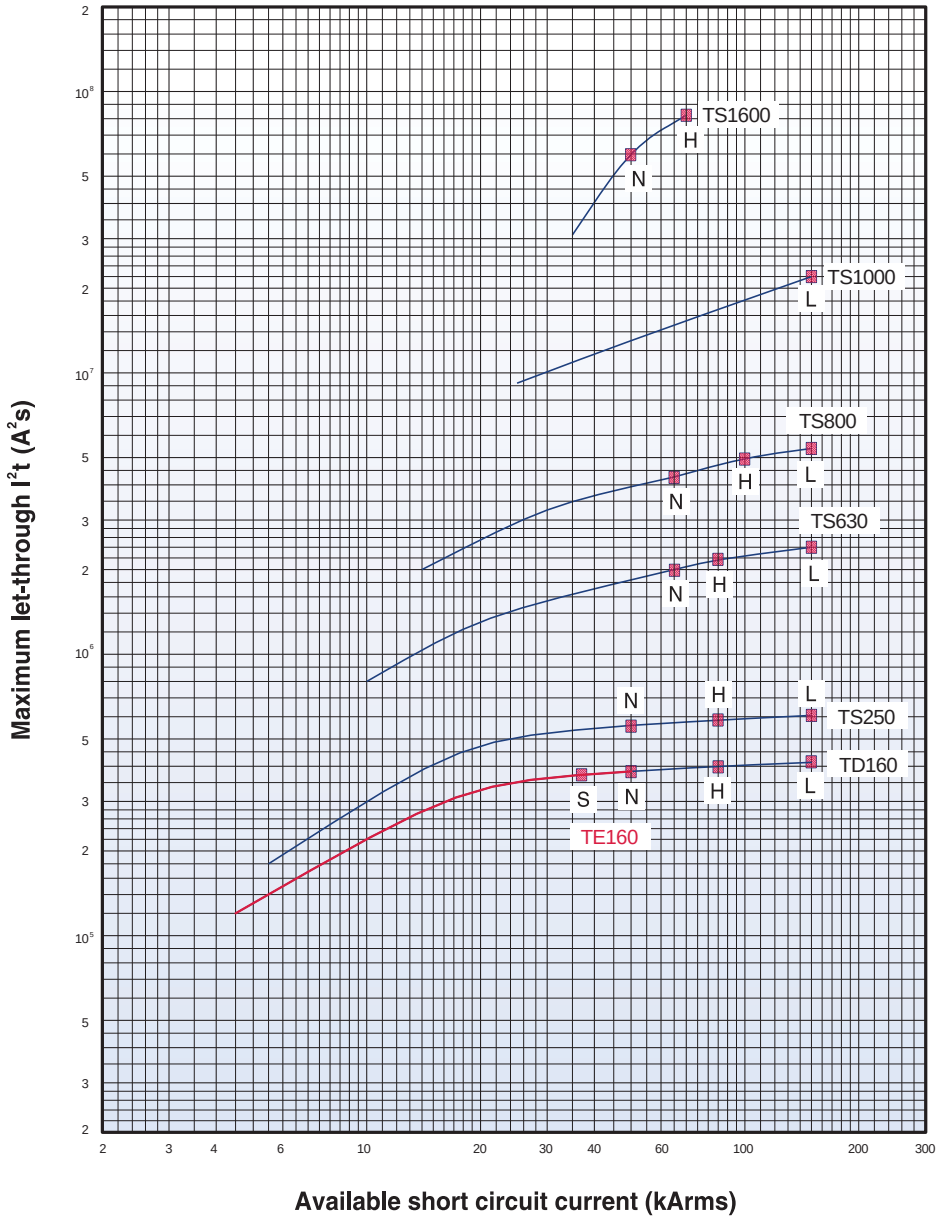

Specific let-through energy curves

480/500V

Thermal stress

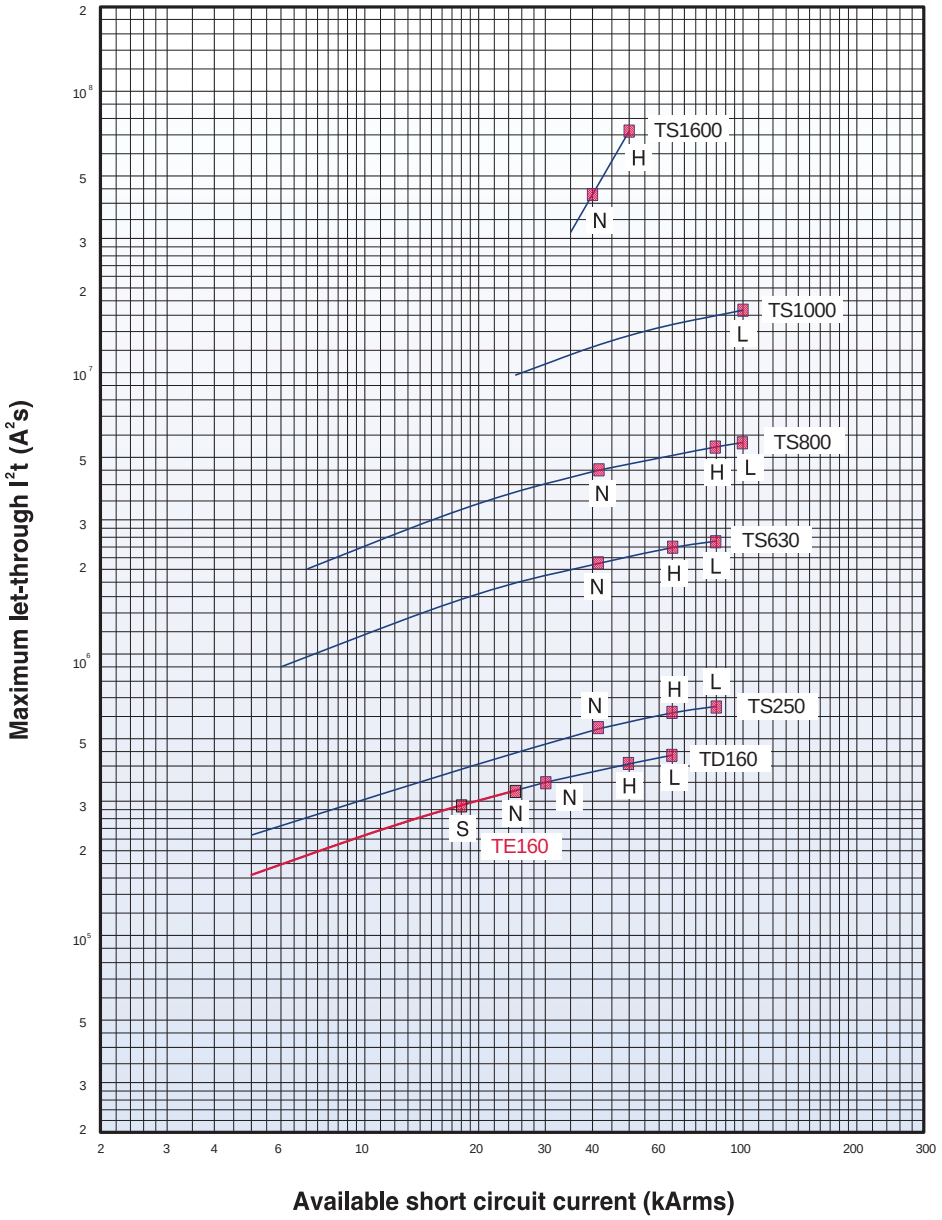

Current-limiting curves

220/240V

Peak current

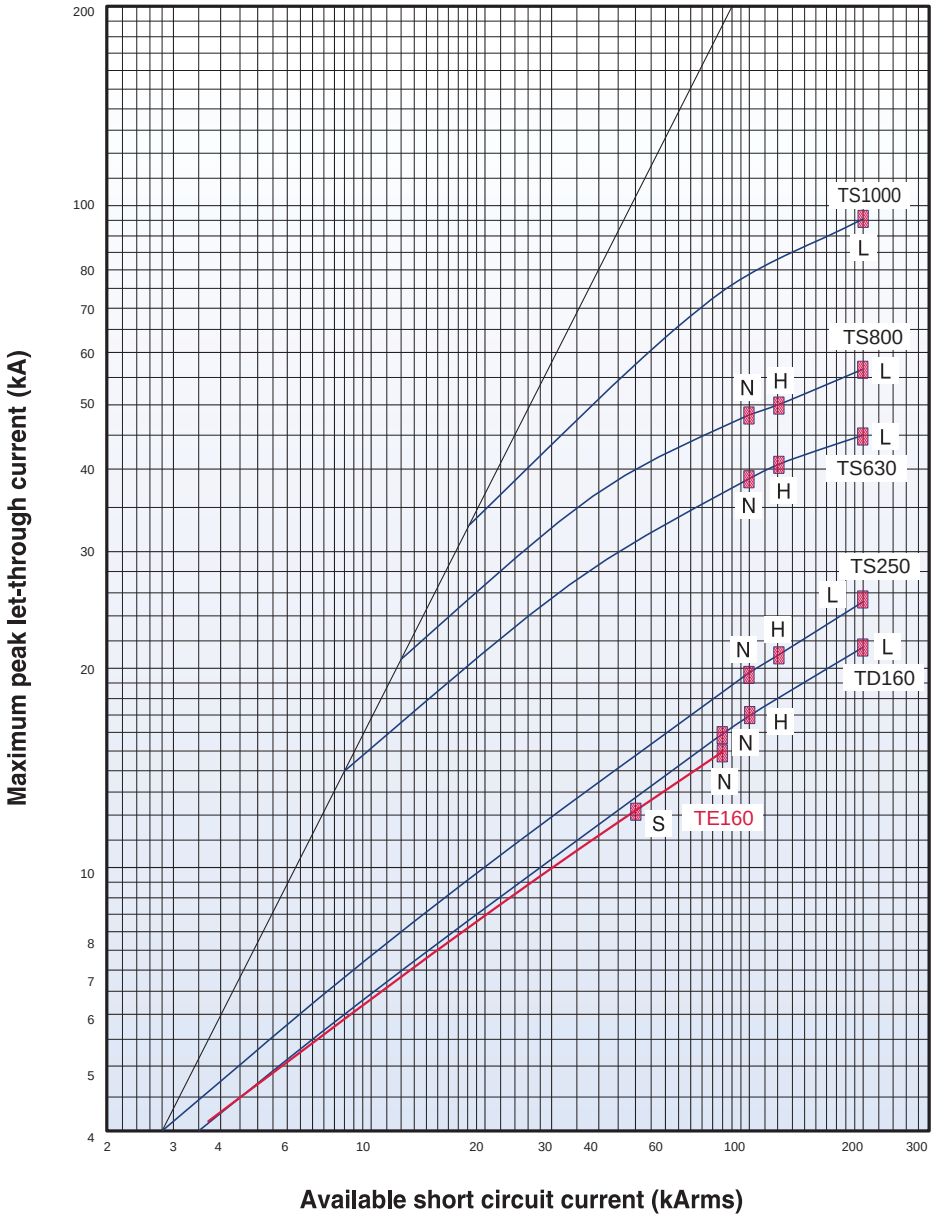

Current-limiting curves

380/415V

Peak current

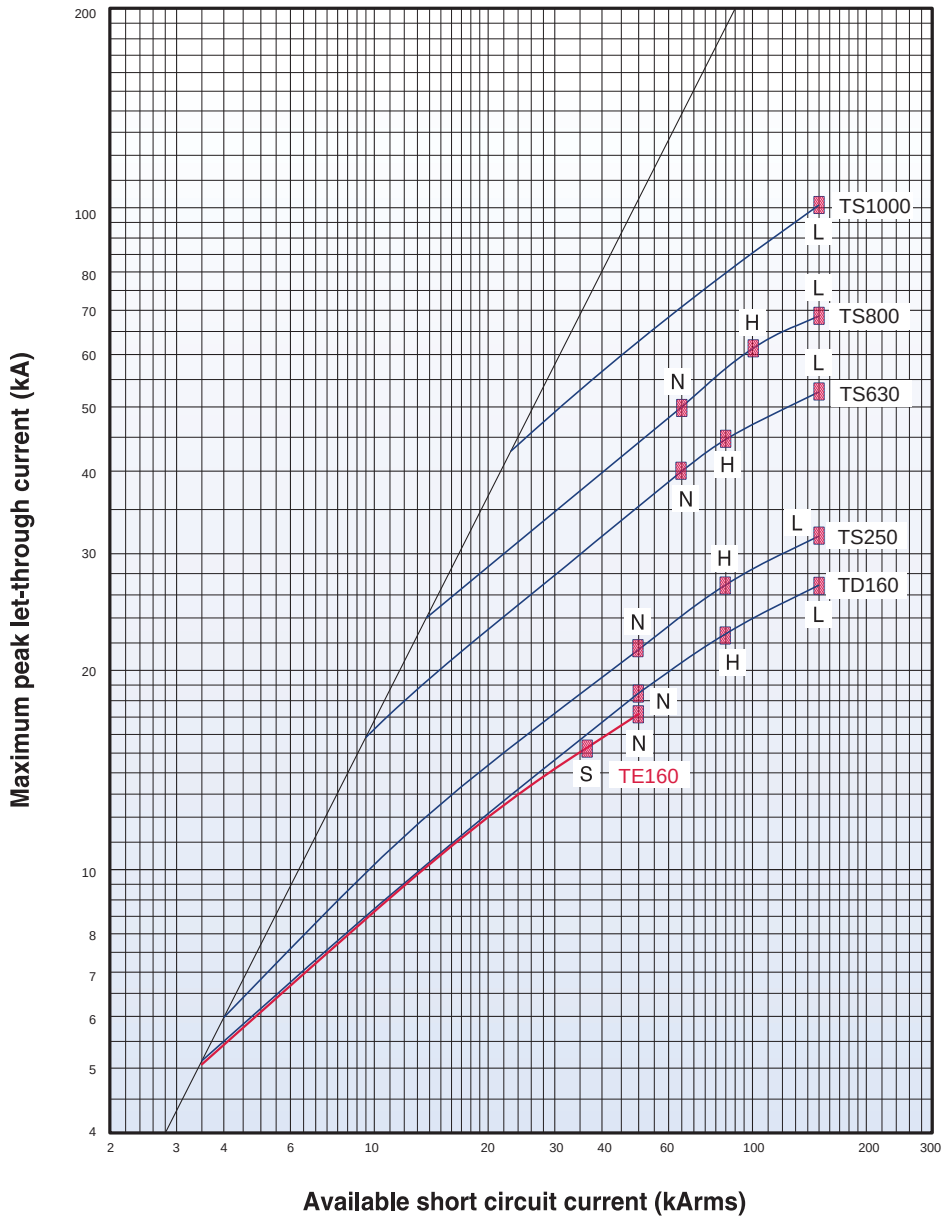

Current-limiting curves

480/500V

Peak current

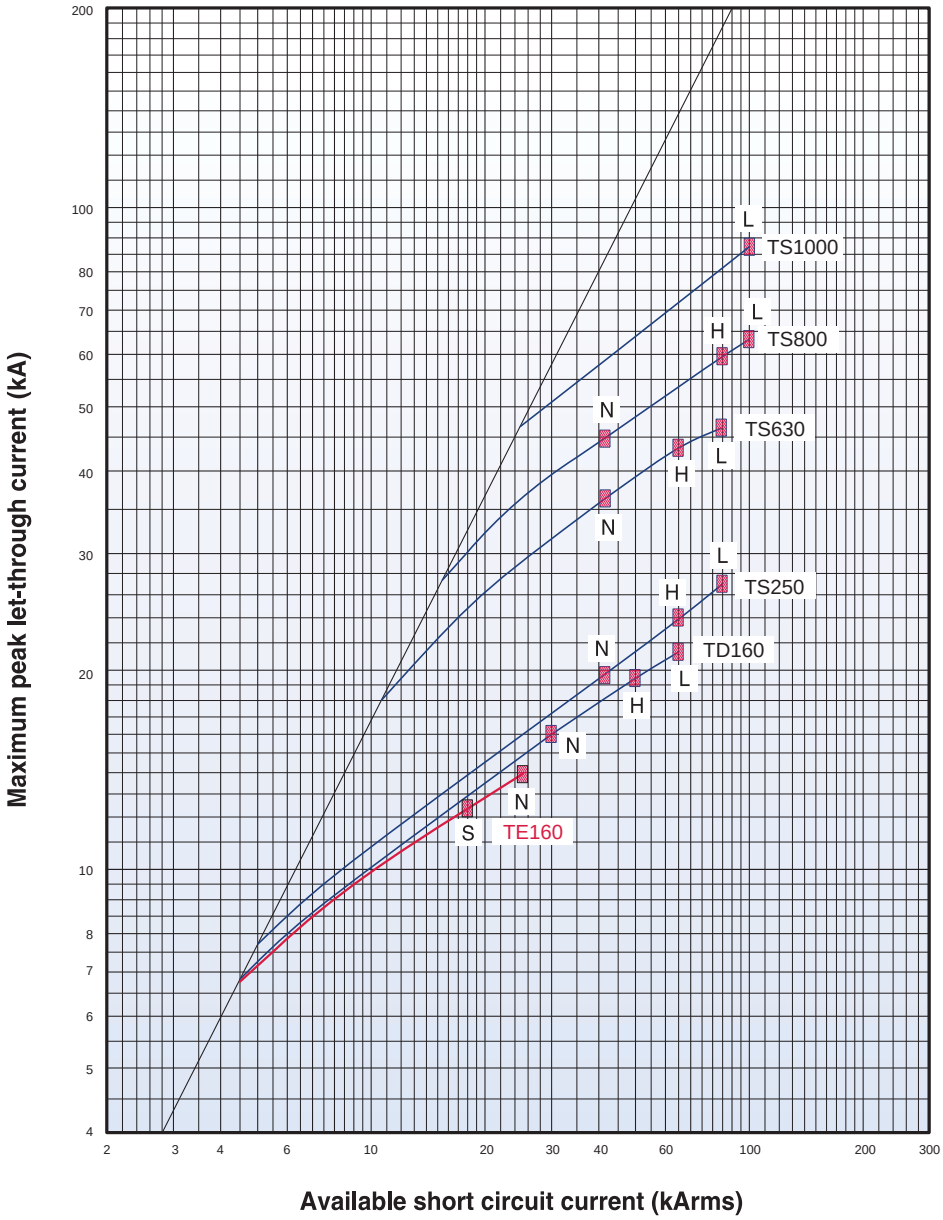

A-6. Dimensions

Susol MCCB TE100, 160 series

TE100, 160 ..... A-6-1

Susol MCCB TD, TS series up to 800A

TD160 ..... A-6-2
TD100, 160 ..... A-6-3
TS100, 160, 250 ..... A-6-4
TS400, 630 ..... A-6-5
TS800 ..... A-6-6

Accessories for TD/TS series up to 800A

Direct rotary handles up to 800AF A-6-7
Extended rotary handles up to 800AF A-6-13
Mechanical interlocking device up to 800AF A-6-19
Plug-in device up to 800AF A-6-22
Terminal cover up to 800AF A-6-28
Rear terminals up to 800AF A-6-30
Extended terminal up to 800AF A-6-30
Rear terminals up to 800AF A-6-31
Circuit breaker with motor operator up to 800AF A-6-37
Wiring connection(motor operator) A-6-38
Wiring diagram(State of operation) A-6-39

Susol MCCB TS series up to 1600A

TS1000, 1250, 1600A front type A-6-40
TS1000, 1250, 1600A front type busbar A-6-41
TS1000, 1250, 1600A rear type A-6-42
Rotary handles for TS 1600AF A-6-43
Locking devices for TS 1600AF A-6-44
Terminals for TS1600AF A-6-45

Susol MCCB DC PV series up to 800A

TD160, TS250 ..... A-6-47
TS630, TS800 ..... A-6-48
Short BUSBAR A-6-49

Overall dimensions

Susol

TE100/160

[mm]

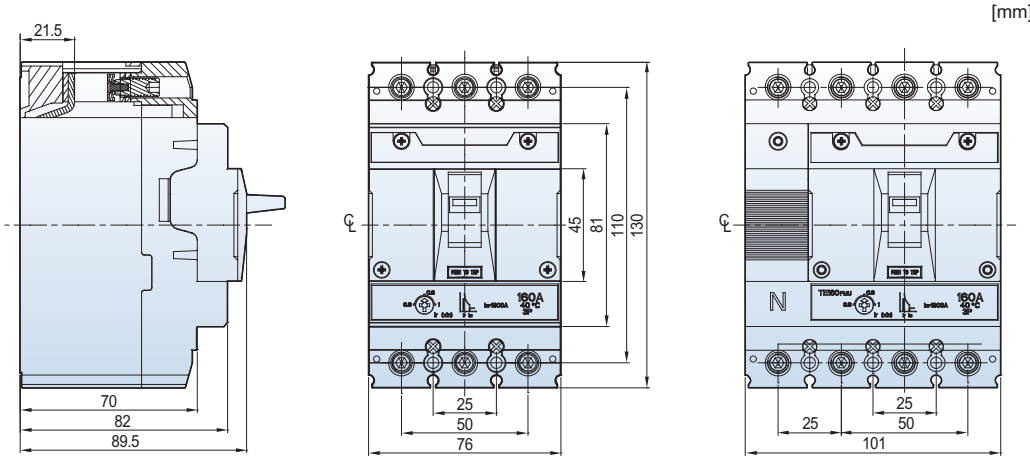

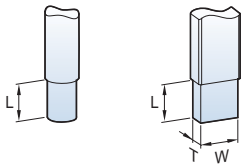

Wire size	Min	2.5mm²
	Max.	70mm²
L(mm)		17.5
W(mm)		≤13.5
T(mm)		≤6
Torque		8

Panel drilling

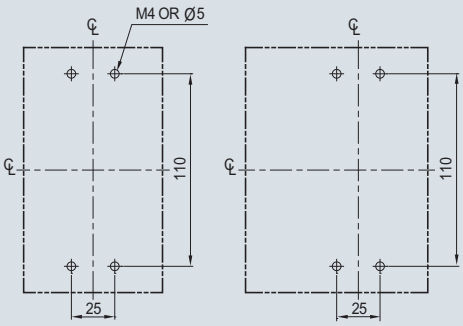

Front panel cutting

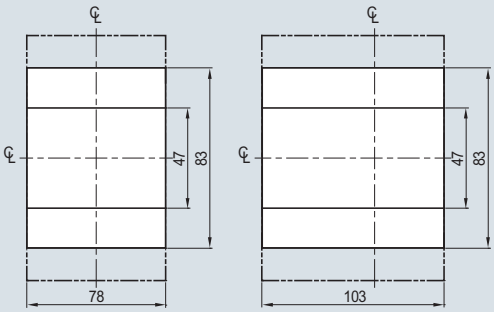

Overall dimensions

Susol

TD160

[mm]

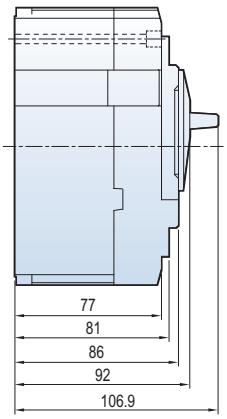

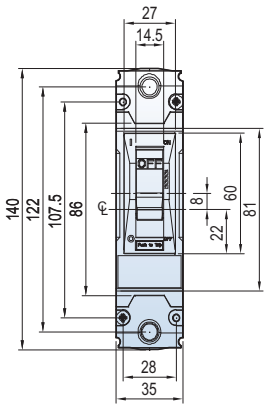

1P

Terminal section

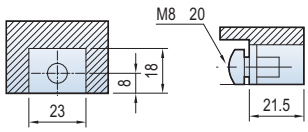

Conductor

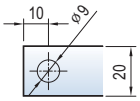

Panel drilling

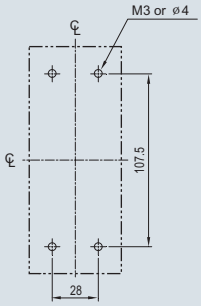

Front panel cutting

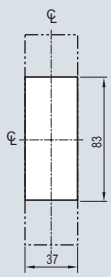

1P

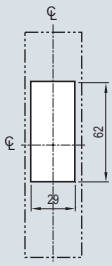

1P

Overall dimensions

Susol

TD100/160

[mm]

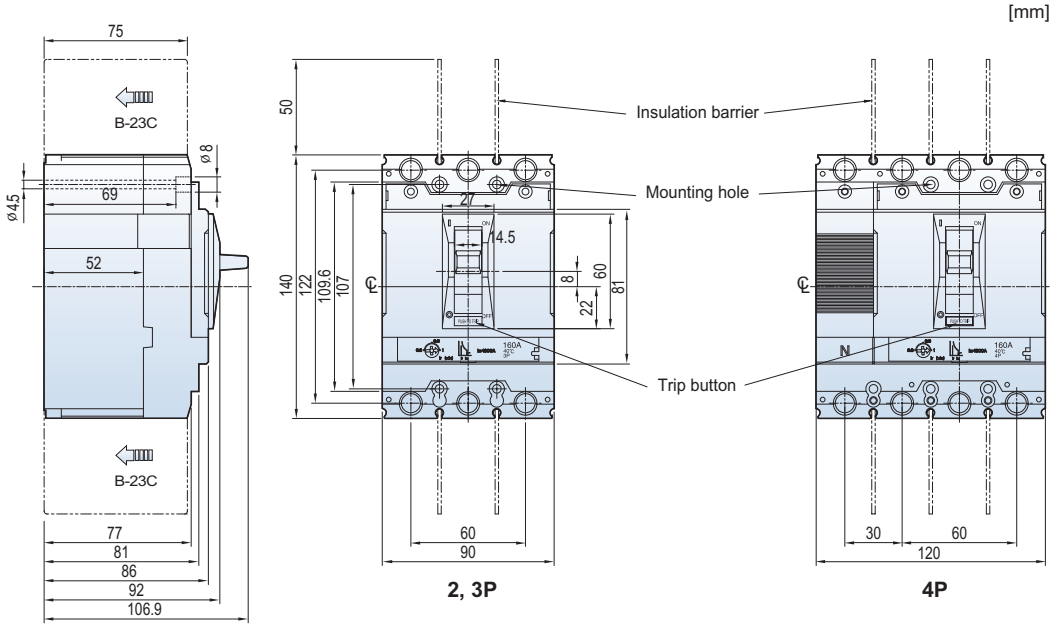

Terminal section

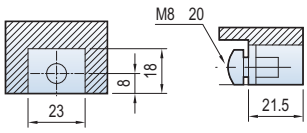

Conductor

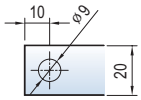

Panel drilling

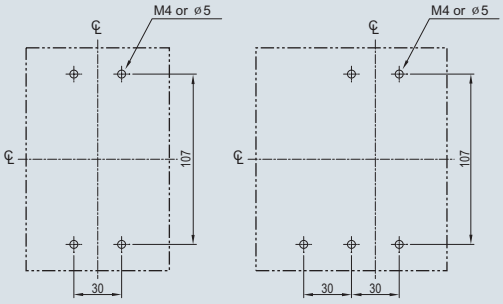

Front panel cutting

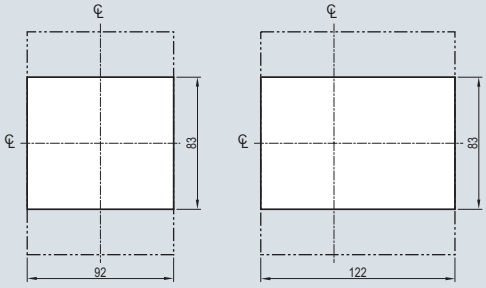

Overall dimensions

Susol

TS100/160/250

[mm]

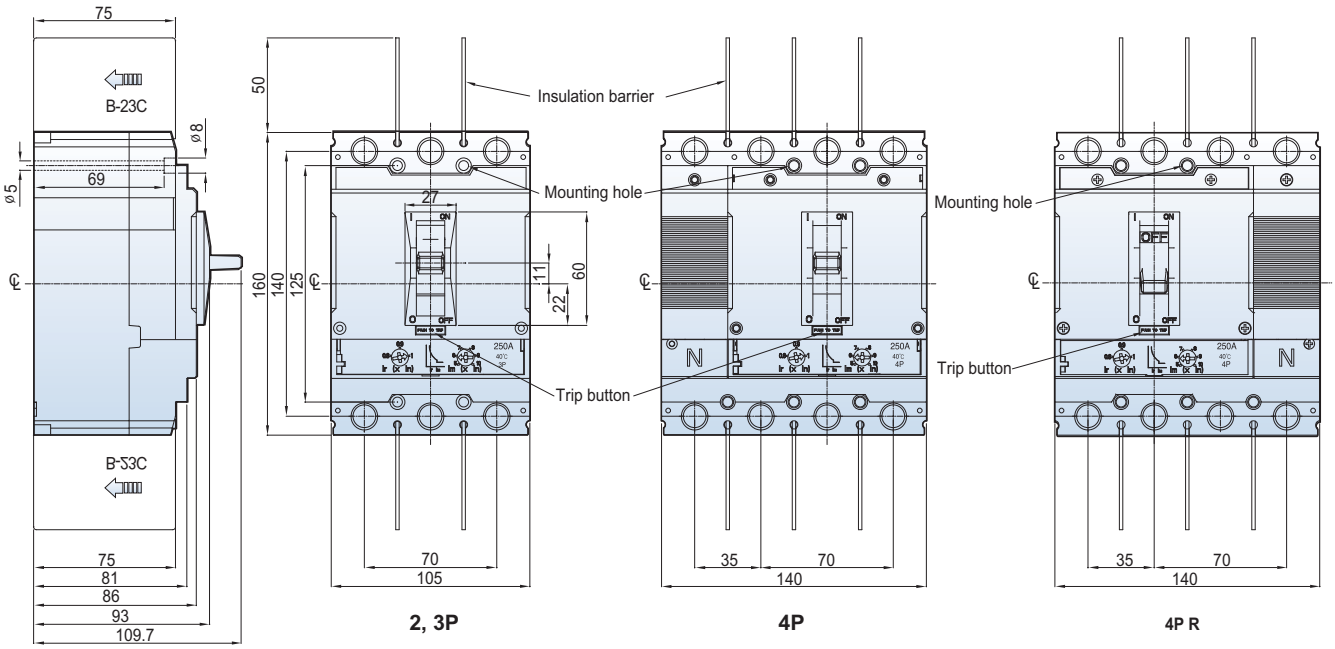

Terminal section

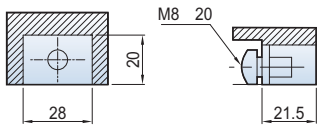

Conductor

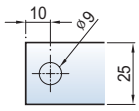

Panel drilling

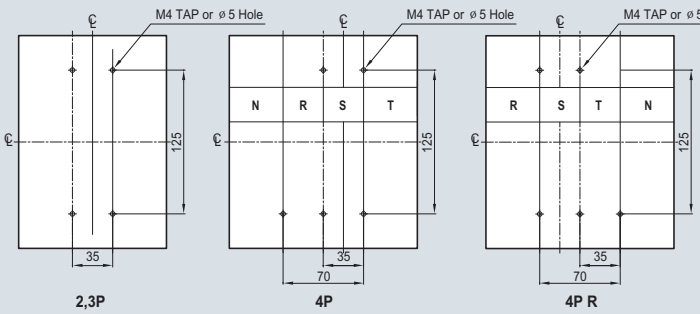

Front panel cutting

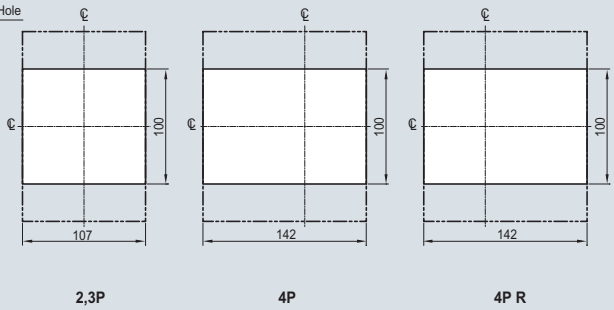

Overall dimensions

Susol

TS400/630

[mm]

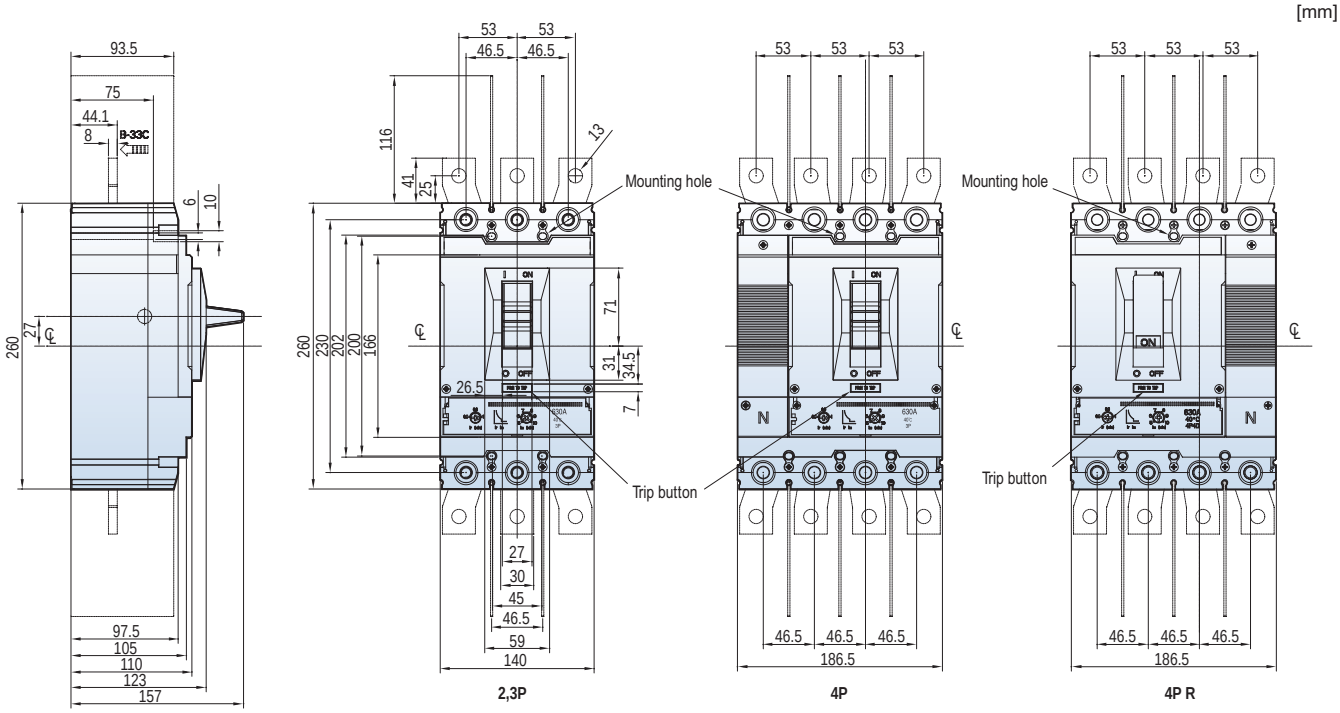

Terminal section

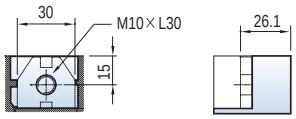

Conductor

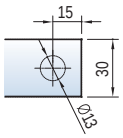

Panel drilling

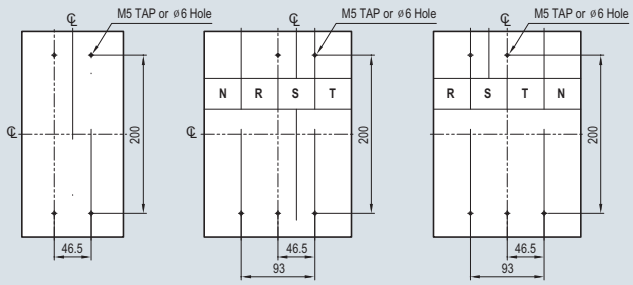

Front panel cutting

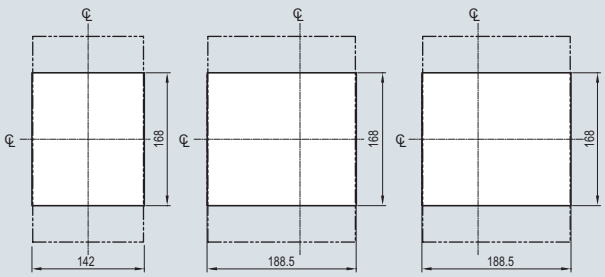

Overall dimensions

Susol

TS800

[mm]

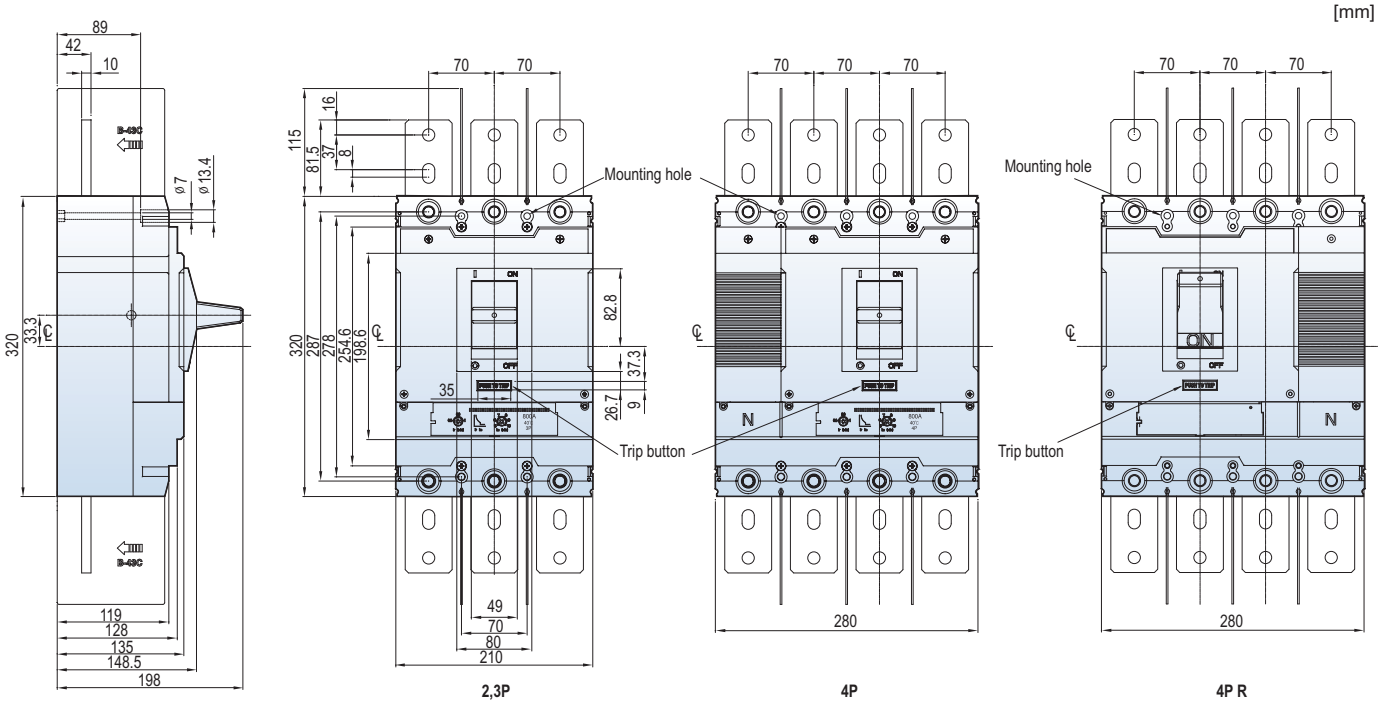

Terminal section

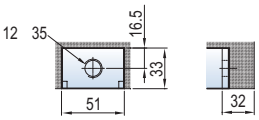

Conductor

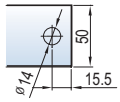

Panel drilling

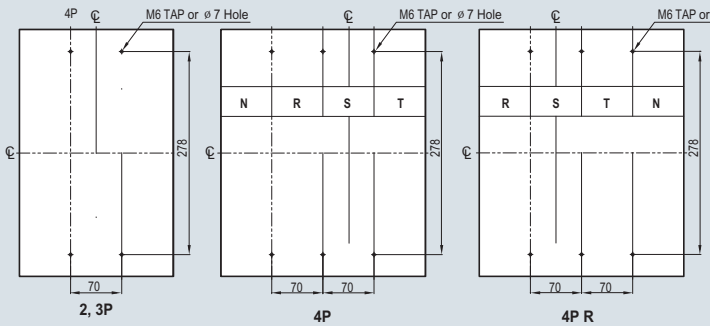

Front panel cutting

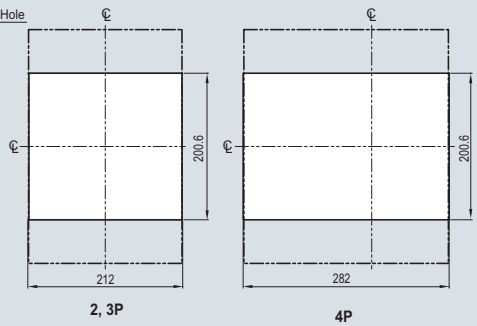

Direct rotary handles

DH1E for TE100/160

[mm]

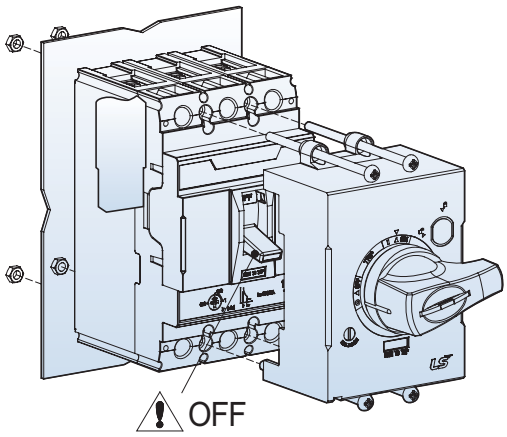

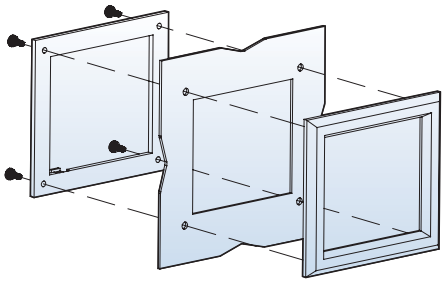

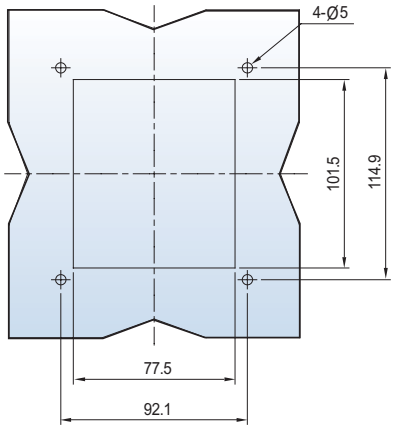

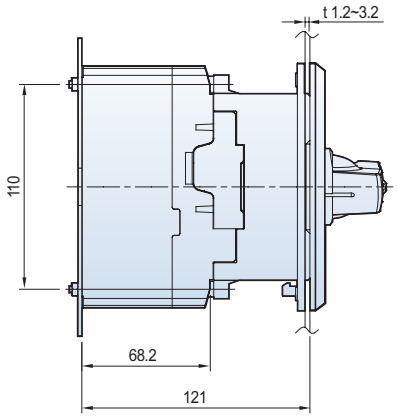

Direct rotary handles

DH1 & DHK1 for TD100/160

[mm]

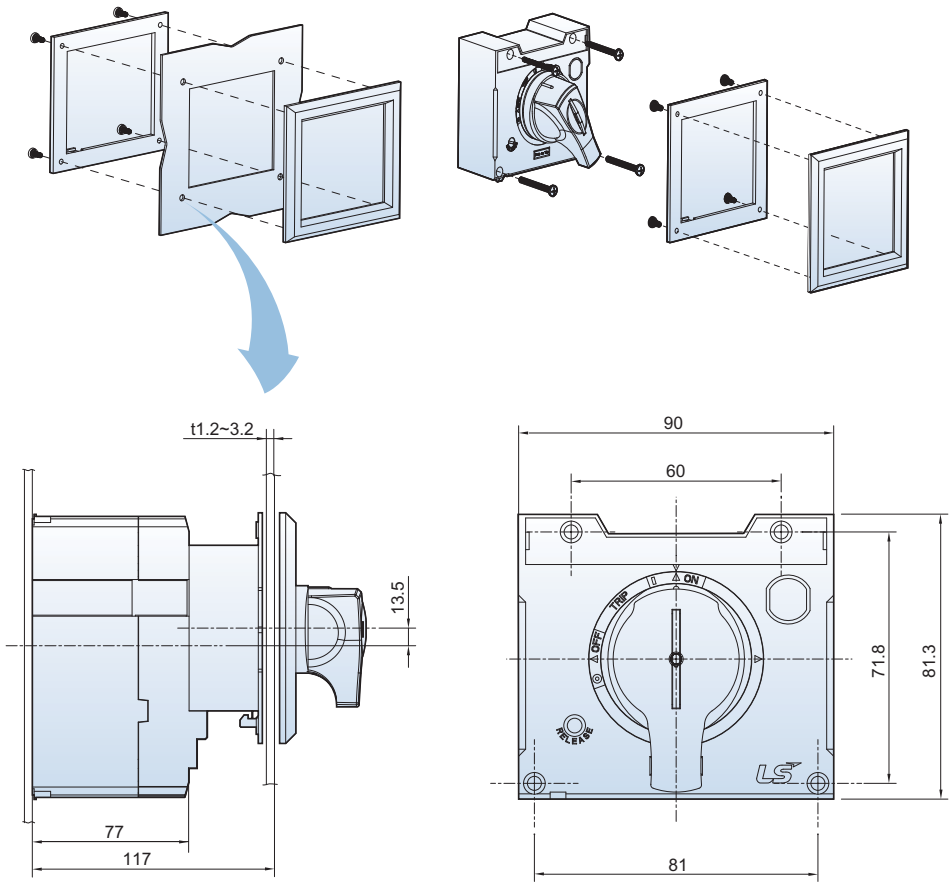

Panel drilling

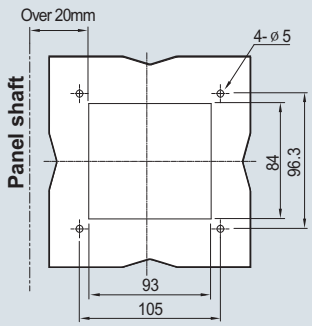

Way of installation

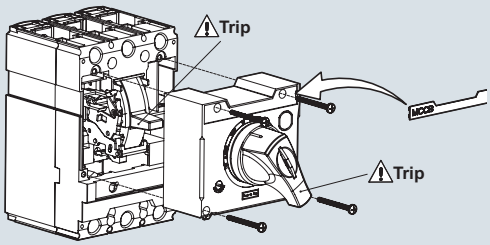

Direct rotary handles

DH2 & DHK2 for TS100/160/250

[mm]

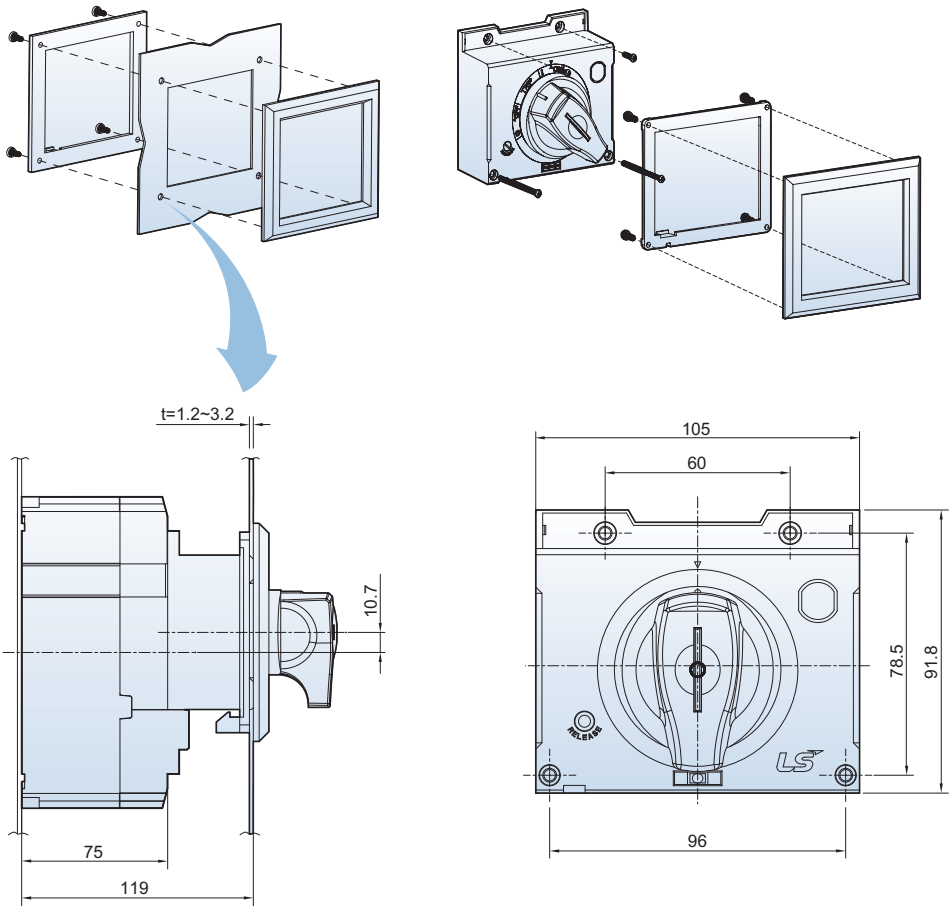

Panel drilling

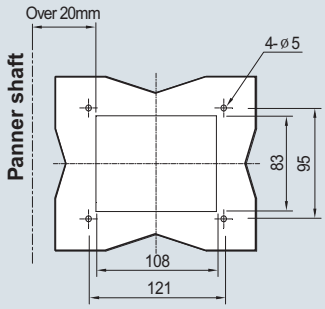

Way of installation

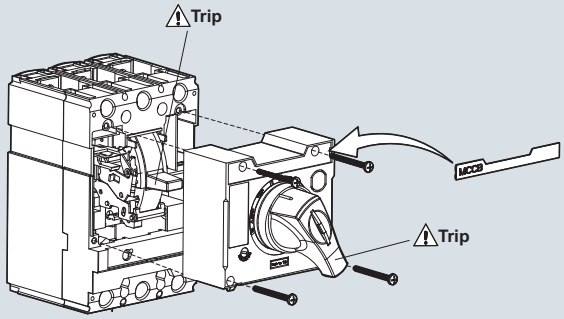

Direct rotary handles

DH3 & DHK3 for TS400/630

[mm]

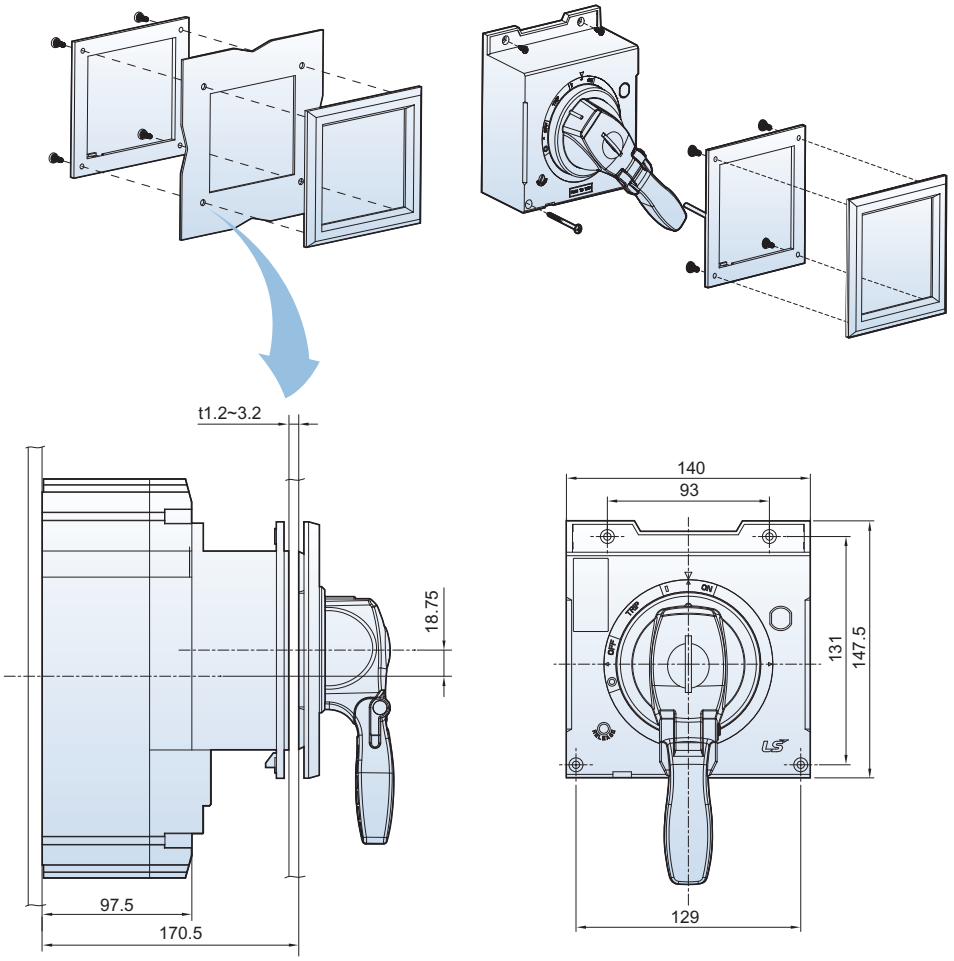

Panel drilling

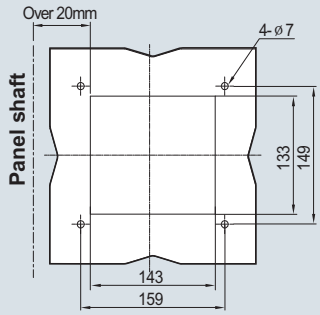

Way of installation

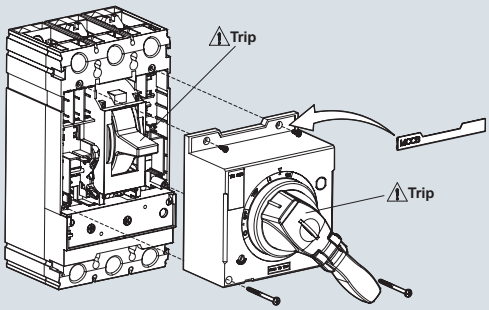

Direct rotary handles

DH4 & DHK4 for TS800

[mm]

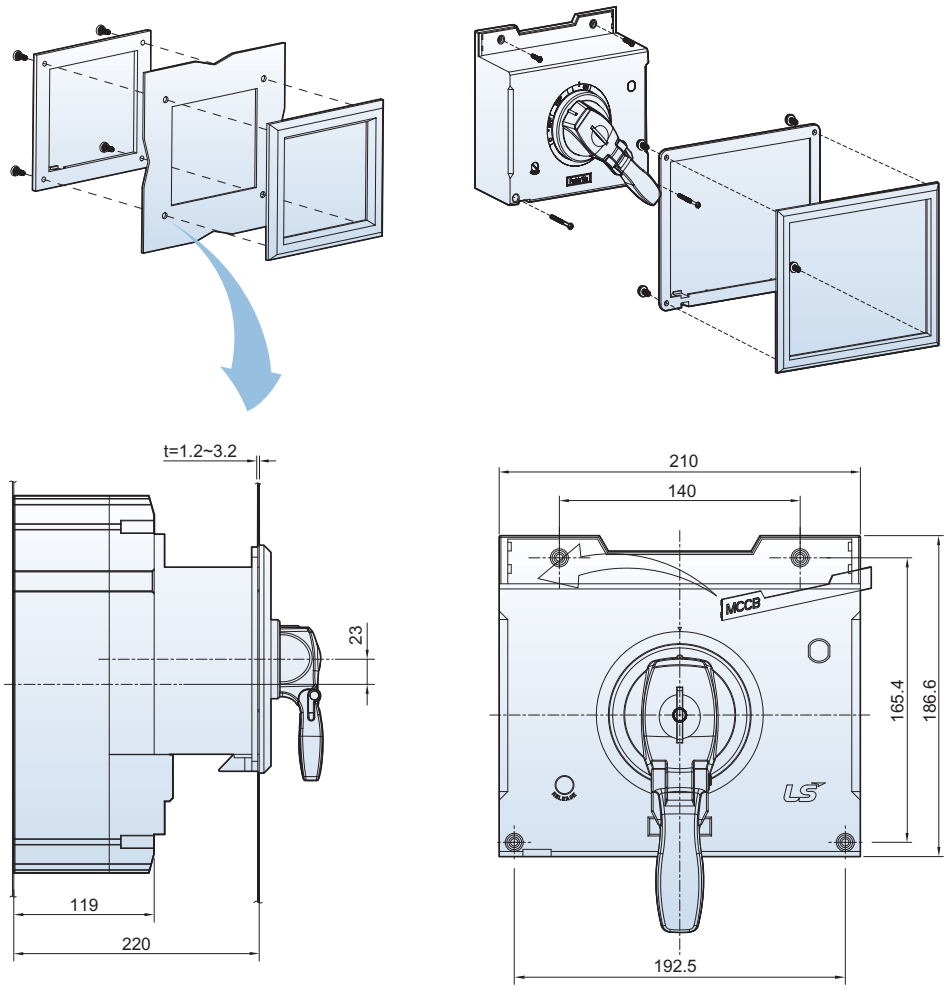

Panel drilling

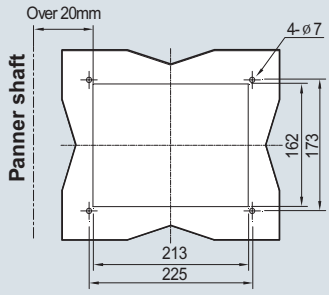

Way of installation

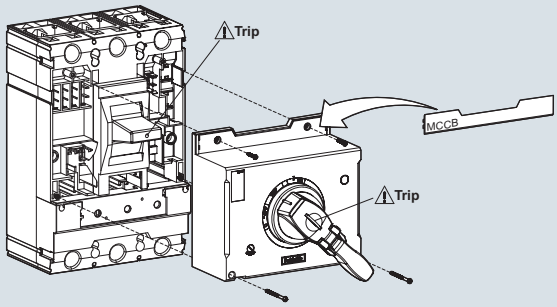

Direct rotary handles

Dimension table for D-handles

[mm]

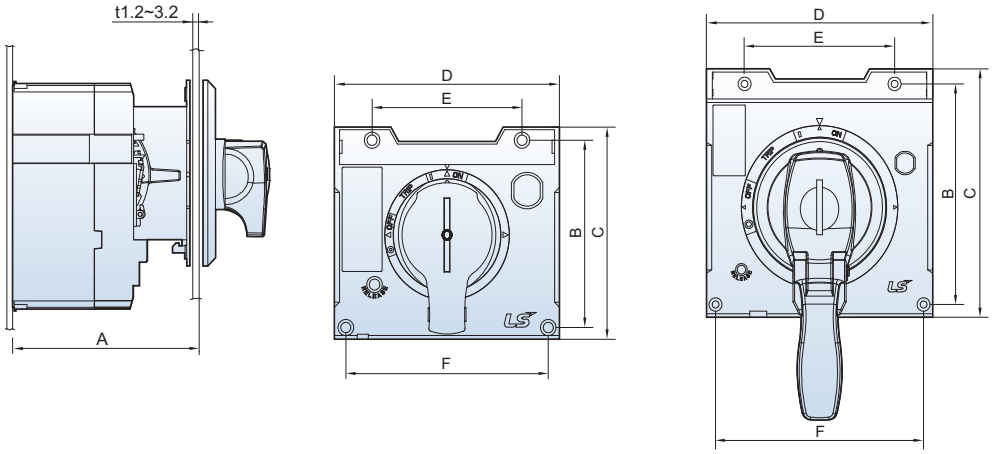

Applicable to	TD160	TS250	TS630	TS800
A (mm)	117	119	170.5	211
B (mm)	71.8	78.5	131	165.4
C (mm)	81.3	91.8	147.5	186.6
D (mm)	90	105	140	210
E (mm)	60	60	93	140
F (mm)	81	96	129	192.5

Extended rotary handles

EH1E for TE100/160

[mm]

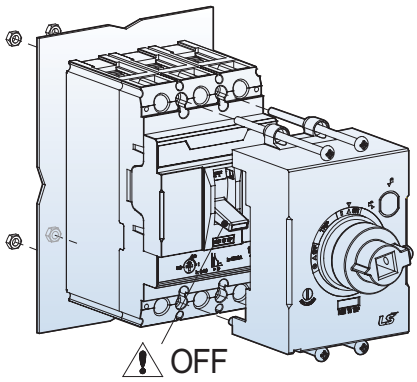

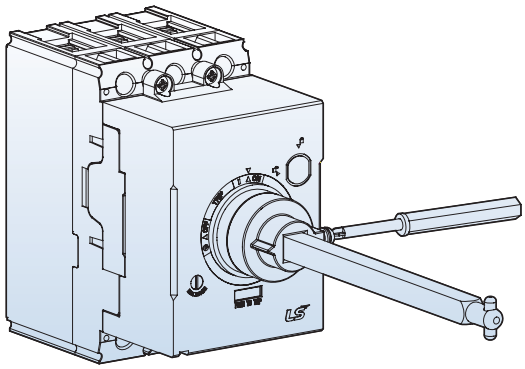

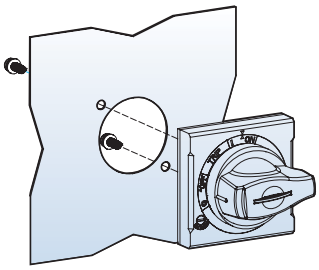

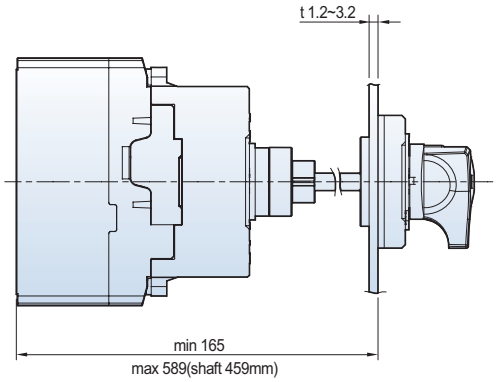

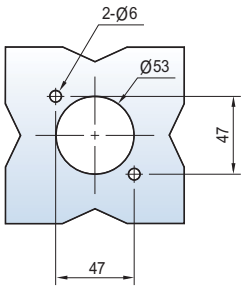

Extended rotary handles

EH1 for TD100/160

[mm]

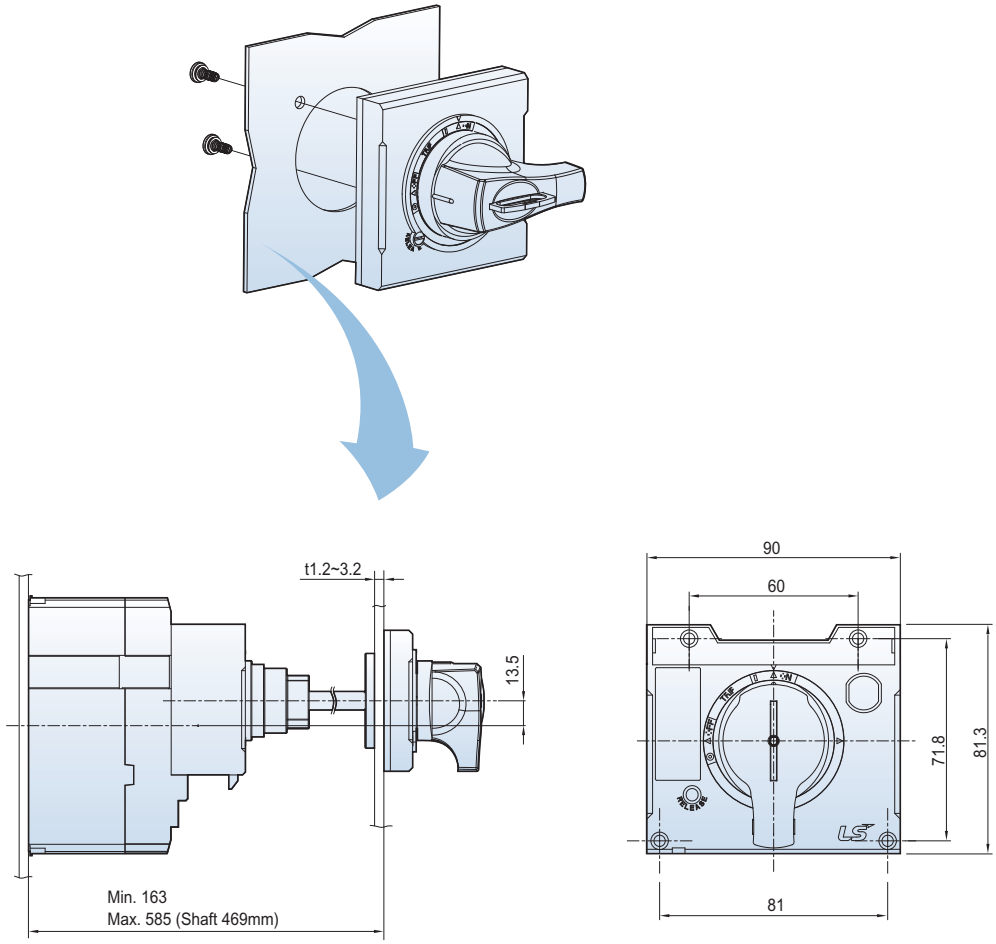

Panel drilling

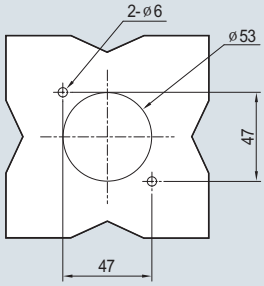

Way of installation

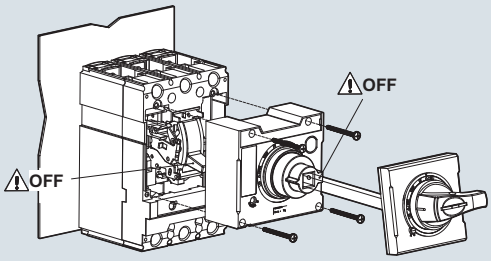

Extended rotary handles

EH2 for TS100/160/250

[mm]

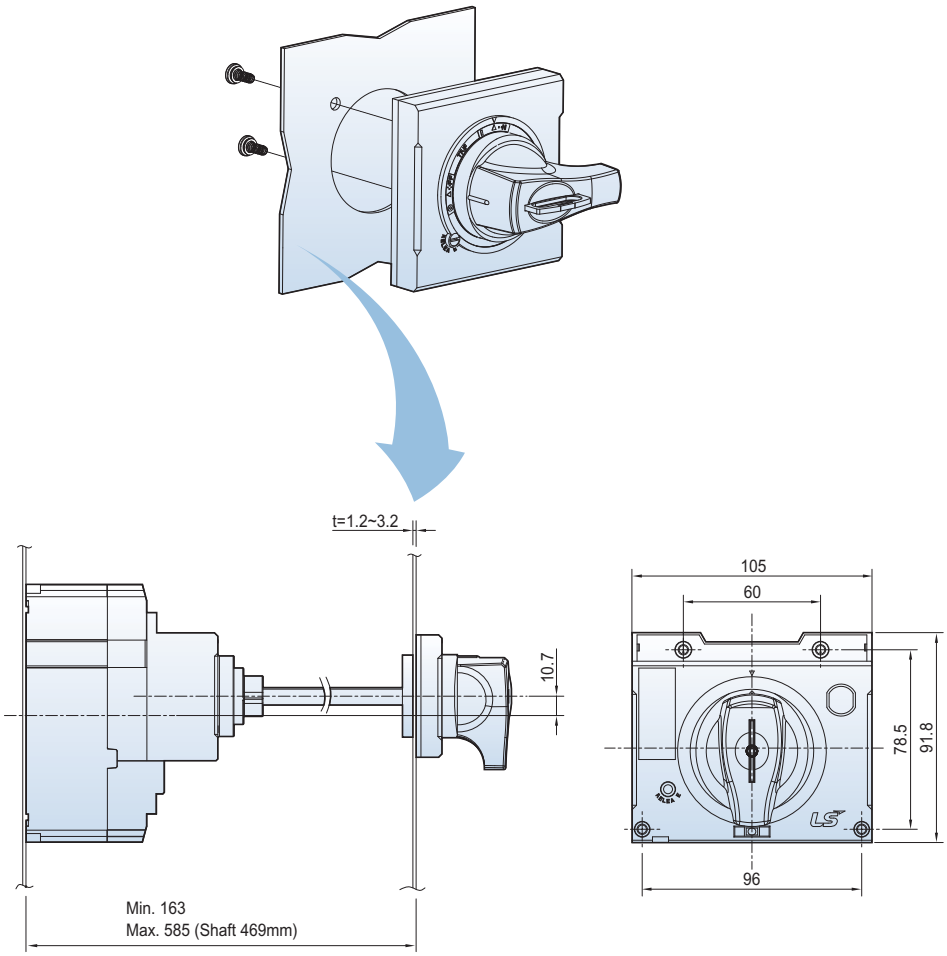

Panel drilling

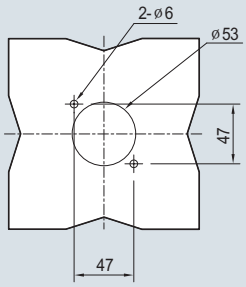

Way of installation

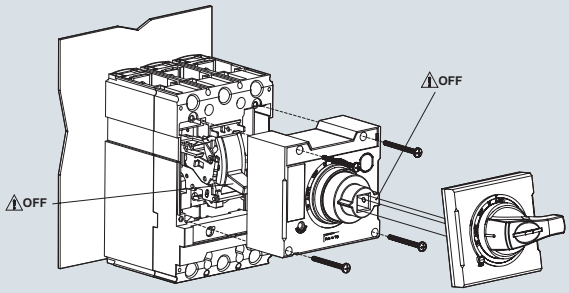

Extended rotary handles

EH3 for TS400/630

[mm]

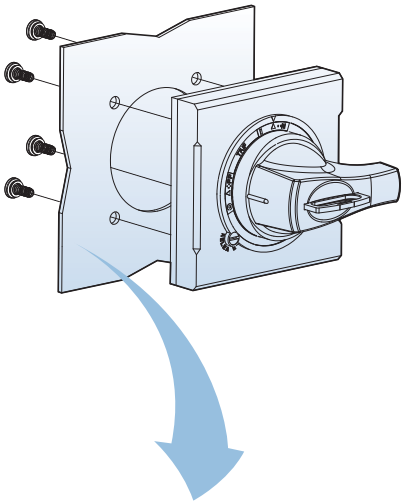

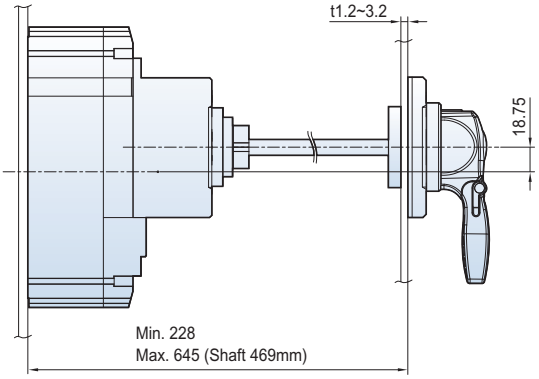

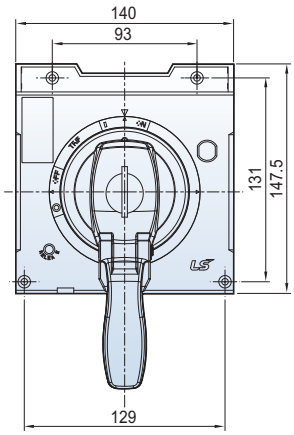

Panel drilling

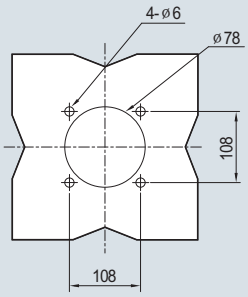

Way of installation

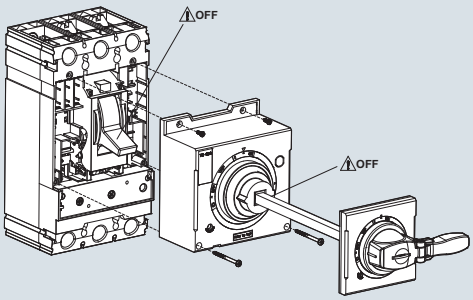

Extended rotary handles

EH4 for TS800

[mm]

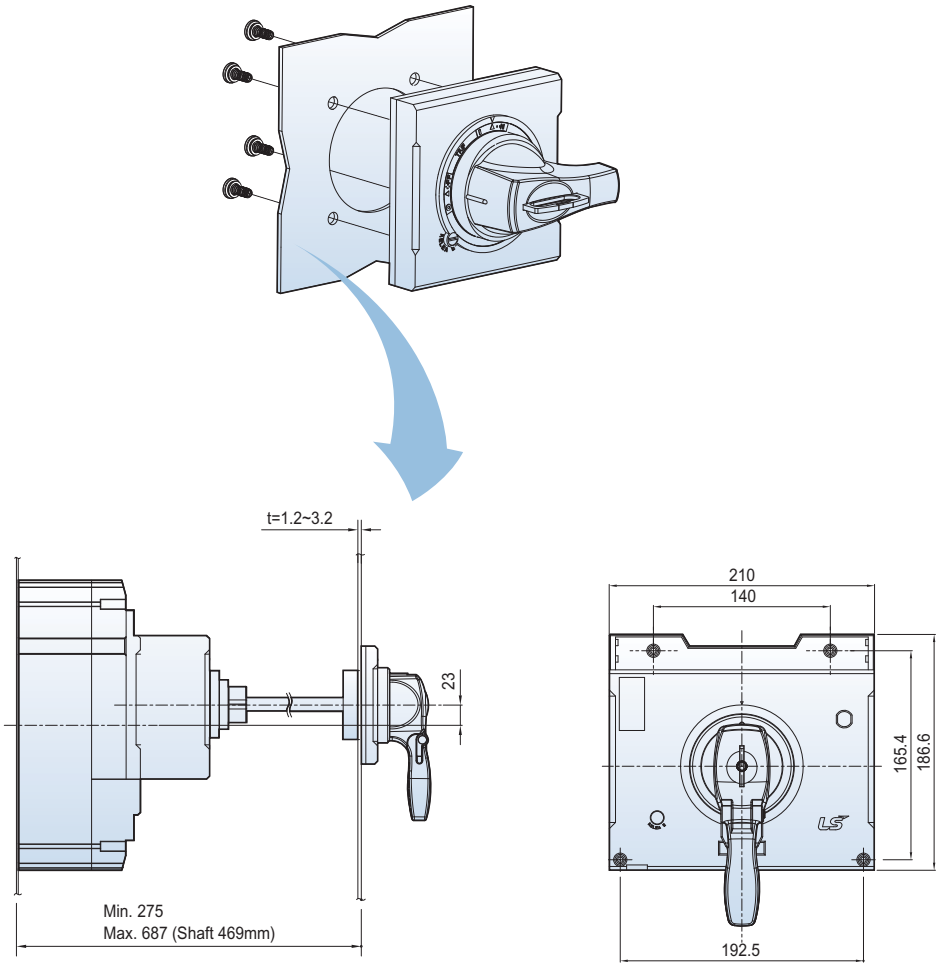

Panel drilling

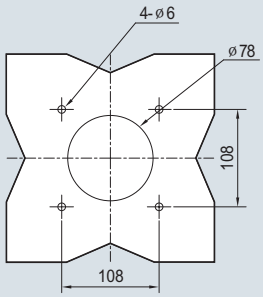

Way of installation

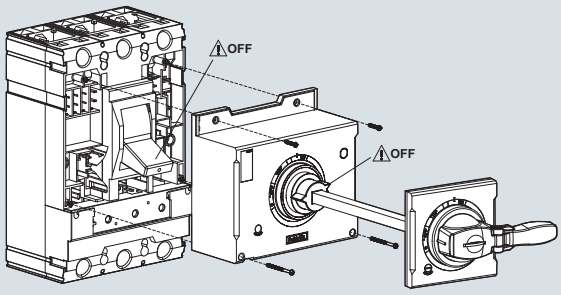

Extended rotary handles

Dimension table for E-handles

[mm]

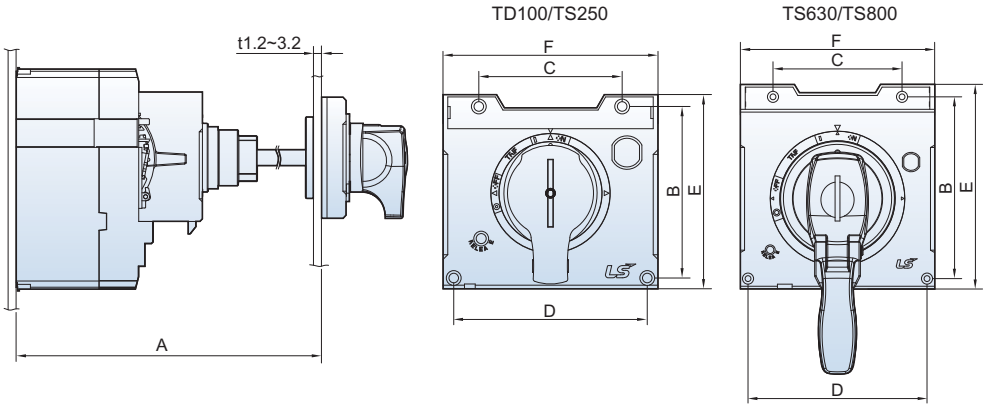

Model	EH1	EH2	EH3	EH4
Applicable to	TD160	TS250	TS630	TS800
A (mm)	Min. 163	Min. 163	Min. 228	Min. 275
	Max. 585	Max. 585	Max. 645	Max. 687
B (mm)	71.8	78.5	131	165.4
C (mm)	60	60	93	140
D (mm)	81	96	129	192.5
E (mm)	81.3	91.8	147.5	186.6
F (mm)	90	105	140	210
Shaft (mm)	469	469	469	469

Mechanical interlocking device

MIT13E, MIT14E for TE100/160

[mm]

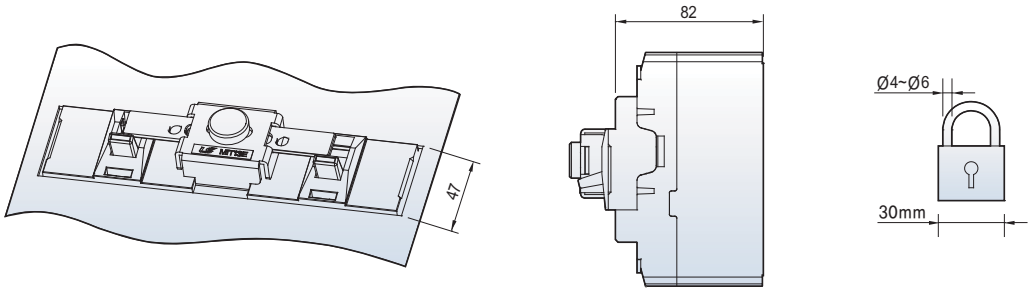

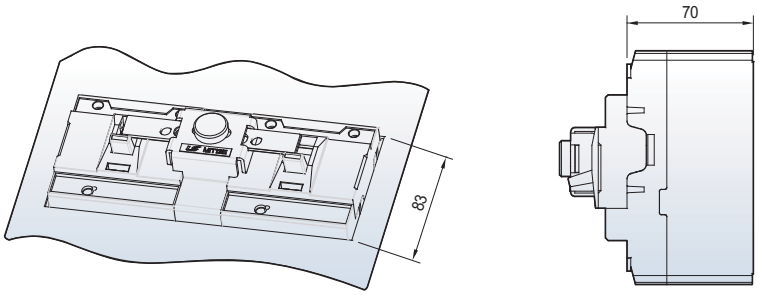

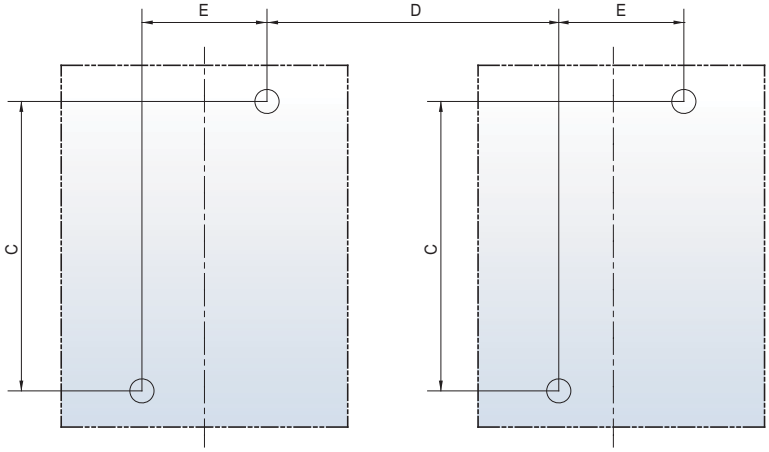

3Pole MCCBs	C(mm)	D(mm)	E(mm)
TE160	110	79	25

4Pole MCCBs	C(mm)	D(mm)	E(mm)
TE160	110	79	50

Mechanical interlocking device

MIT13, MIT23, MIT33, MIT43

[mm]

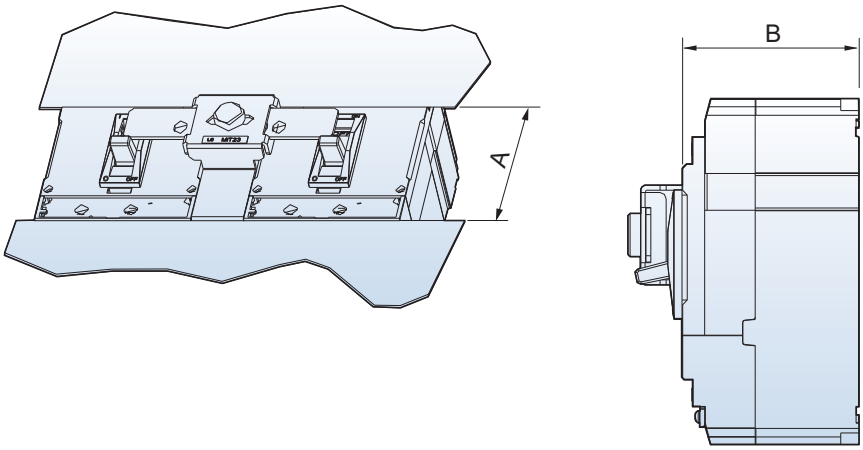

	A (mm)	B (mm)
TD160	83	86
TS250	102	86
TS630	168	110
TS800	201	135

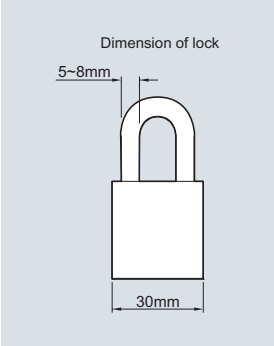

Mechanical interlocking device

Mounting dimension for MIT

[mm]

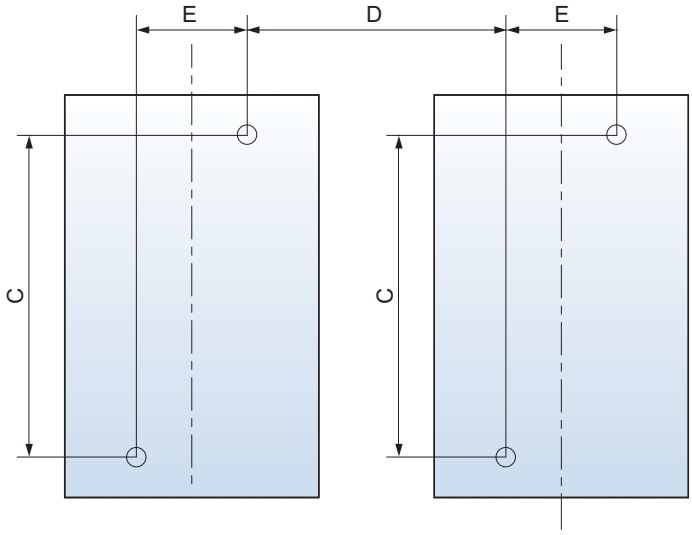

2, 3Pole MCCBs	C(mm)	D(mm)	E(mm)
TD100/160	107	90	30
TS100/160/250	125	105	35
TS400/630	200	139.5	46.5
TS800	278	210	70

4Pole MCCBs	C(mm)	D(mm)	E(mm)
TD100/160	107	90	60
TS100/160/250	125	105	70
TS400/630	200	139.5	93
TS800	278	210	140

Plug-in device

Plug-in devices for TD100/160

[mm]

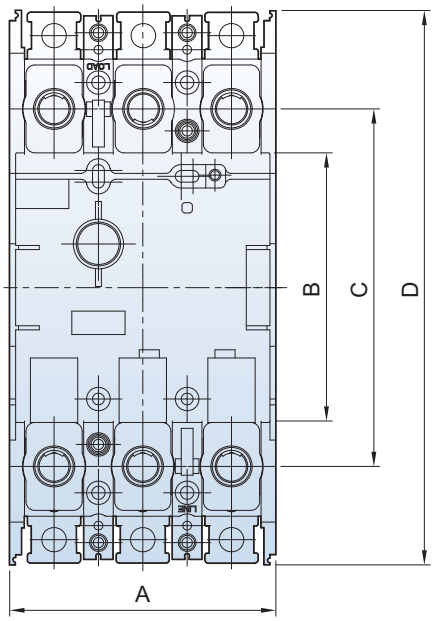

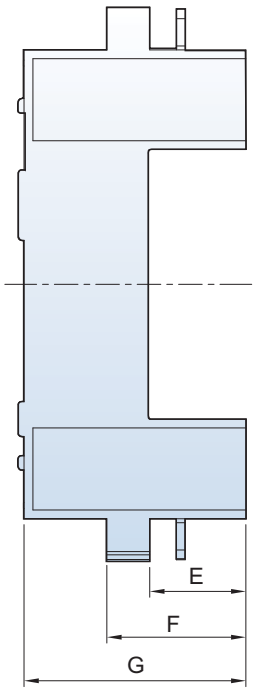

TD100/160

	TD100/160
A(mm)	90
B(mm)	92
C(mm)	122
D(mm)	189.2
E(mm)	32.5
F(mm)	47
G(mm)	75

Plug-in device

Plug-in devices for TS100/160/250/400/630/800

[mm]

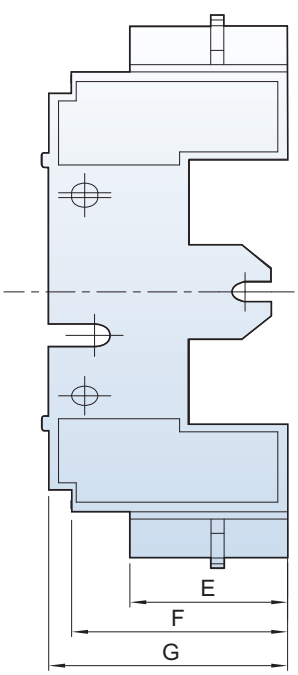

TS100/160/250/400/630

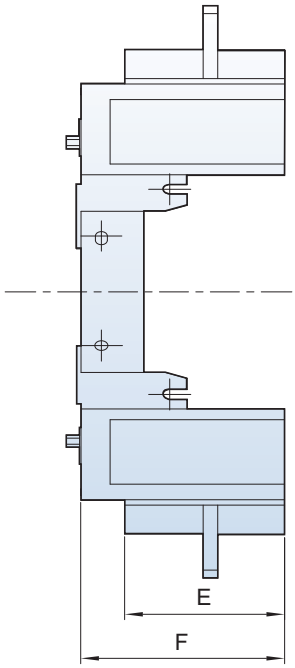

TS800

	TS100/160/250	TS400/630	TS800
A(mm)	105	140	210
B(mm)	103.5	186.4	220
C(mm)	140	230	287
D(mm)	220	335.2	451
E(mm)	48.2	73	110
F(mm)	66	94.2	140
G(mm)	73	102	-

Plug-in device

Mounting to front plate

[mm]

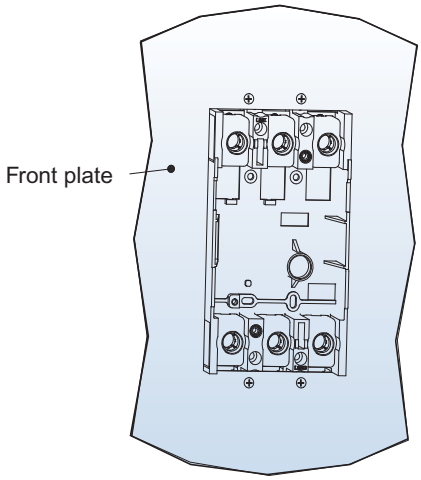

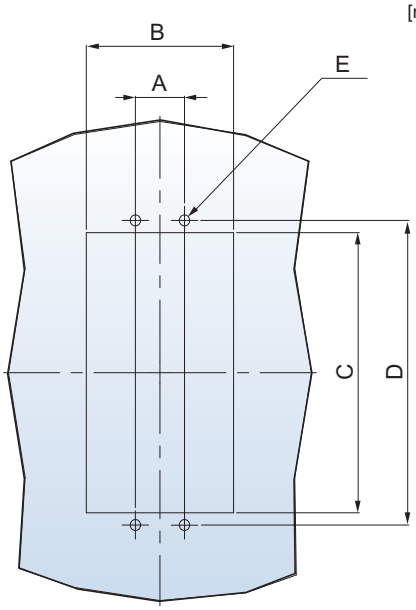

Applicable to	TD100/160	TS100/160/250	TS400/630	TS800
A (mm)	30	35	46.5	70
B (mm)	90	105	140	210
C (mm)	160	182	290	387
D (mm)	173	202	314	422
E (mm)	M4 or ø 5	M4 or ø 5	M5 or ø 6	M6 or ø 7

Plug-in device

Rail mounting

[mm]

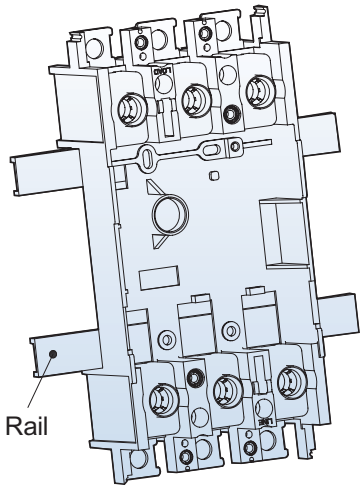

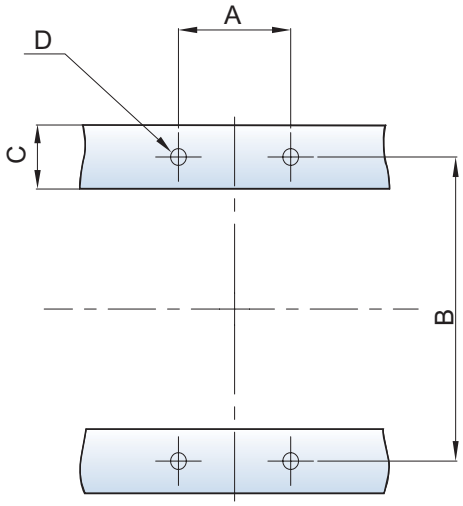

Applicable to	TD100/160	TS100/160/250	TS400/630	TS800
A (mm)	30	70	100	156
B (mm)	76	77.8	101.6	104.2
C (mm)	14	28	32	43
D (mm)	M4 or ø 5	M6 or ø 7	M6 or ø 7	M8 or ø 9

Plug-in device

Mounting to rear plate with cover back

[mm]

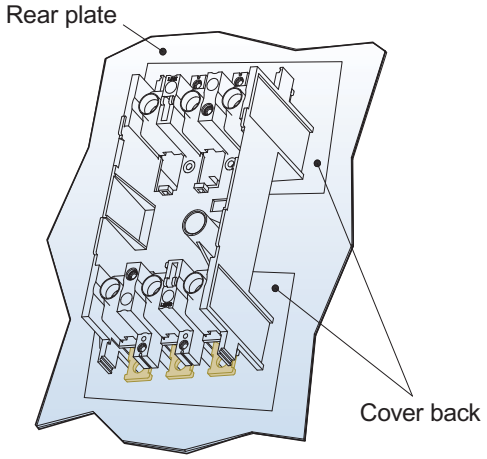

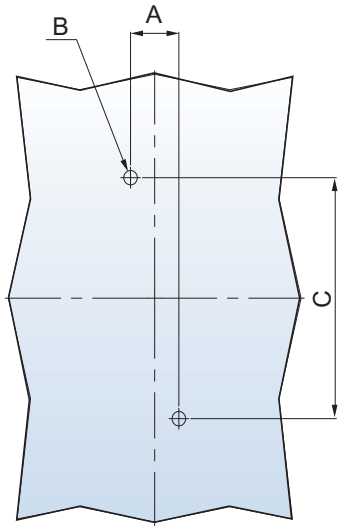

Applicable to	TD100/160	TS100/160/250	TS400/630	TS800
A (mm)	30	35	46.5	70
B (mm)	140	154	216	343
C (mm)	M4 or ø 5	M4 or ø 5	M5 or ø 6	M6 or ø 7

Plug-in device

Mounting for TD100/160

[mm]

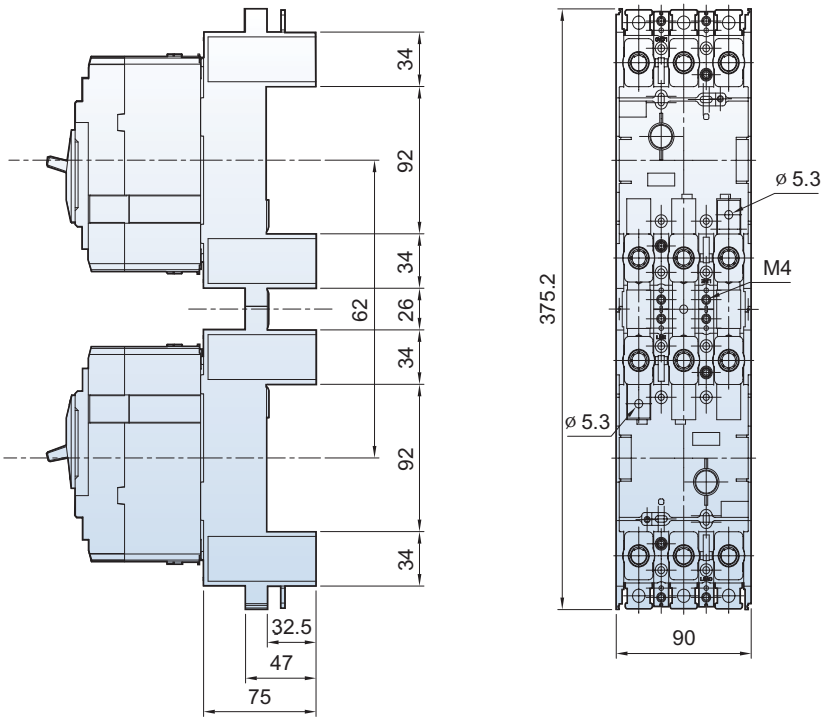

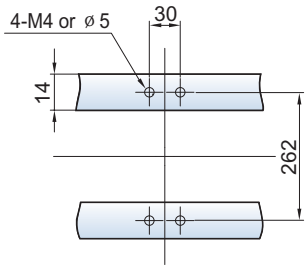

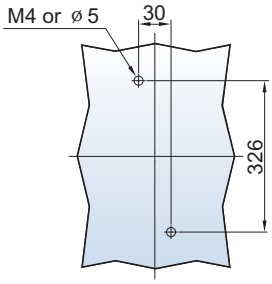

Terminal cover

ITS13E, ITS14E for TE100/160

[mm]

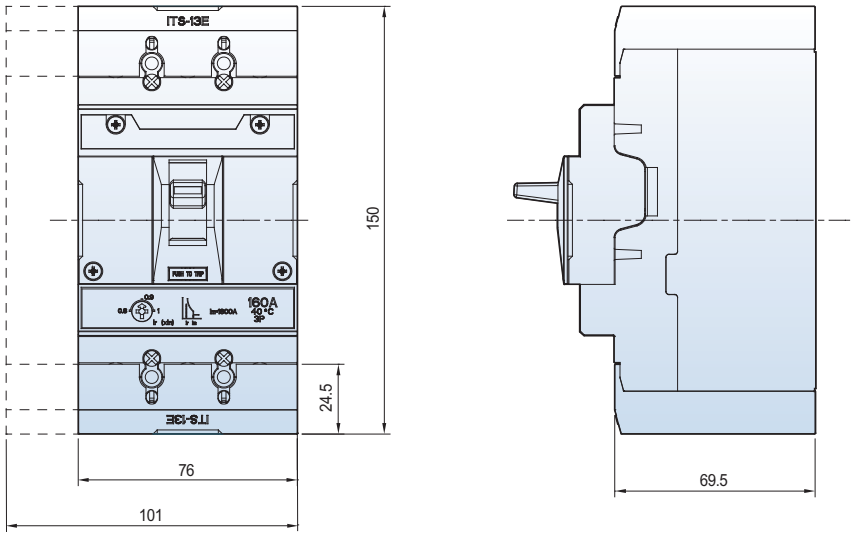

ITL13E, ITL14E for TE100/160

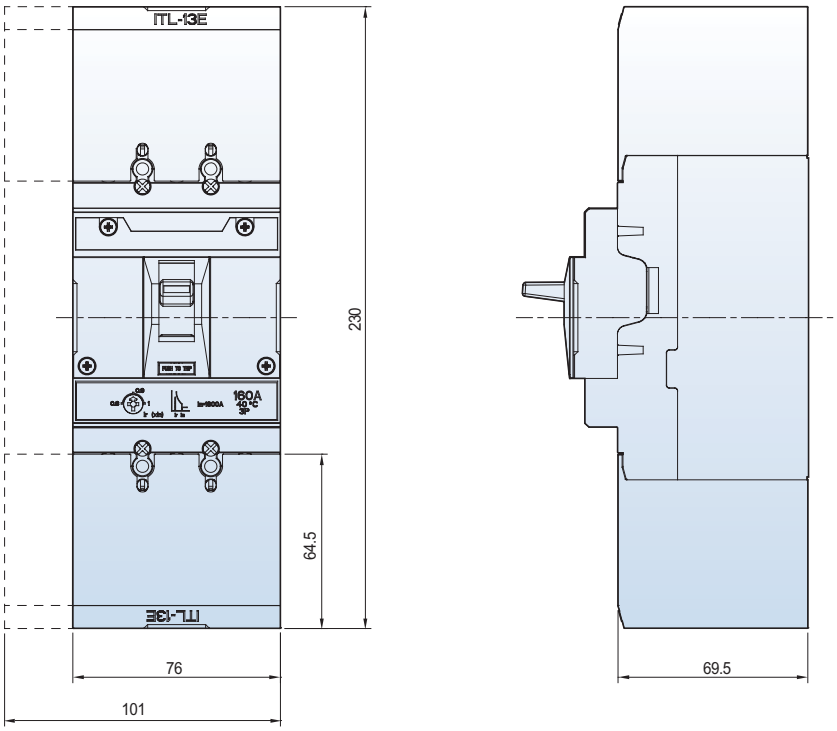

Terminal cover

ITS and ITL for TD100/160, TS100/160/250/400/630/800

[mm]

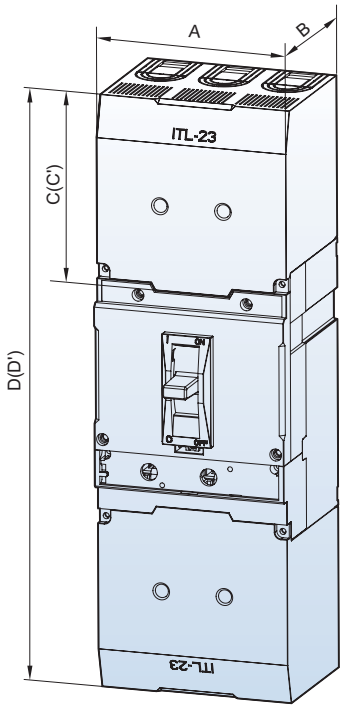

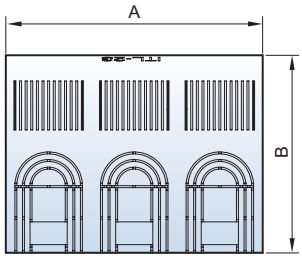

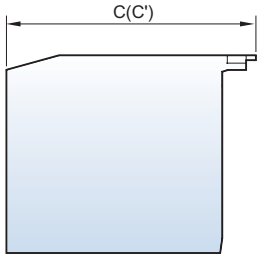

Applicable to	Type			Dimension(mm)					
Frame type	Pole	Long type	Short type	A	B	C (Long type)	C′ (Short type)	D (Long type)	D′ (Short type)
TD100, TD160	2P, 3P	ITL13	ITS13	90	80.8	48.5	30.5	196	160
	4P	ITL14	ITS14	120	80.8	32	25		
TS100, TS160, TS250	2P, 3P	ITL23	ITS23	105	80.8	102	36.3	321.4	190
	4P	ITL24	ITS24	140	80.8	98	32.3		
TS400, TS630	2P, 3P	ITL33	ITS33	140	105	144.5	54.8	479.4	300
	4P	ITL34	ITS34	186	105	138.5	48.8		
TS800	2P, 3P	ITL43	ITS43	210	127.8	181.5	61.5	600	360
	4P	ITL44	ITS44	280	127.8	172.5	52.5		

Rear connection

RTF13, RTF14 for TE100/160

[mm]

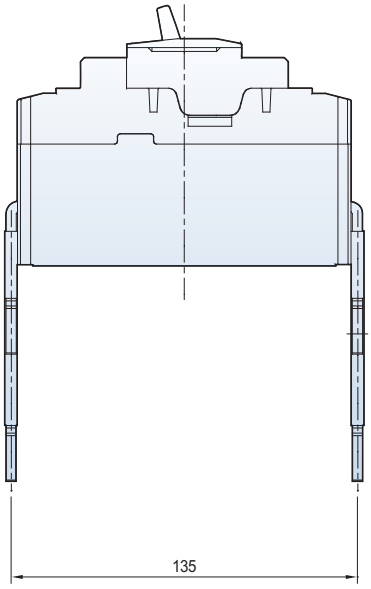

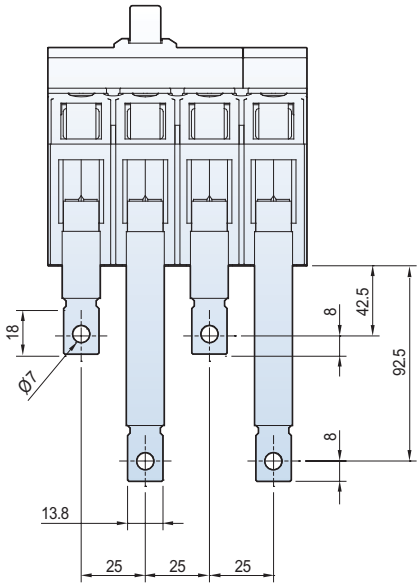

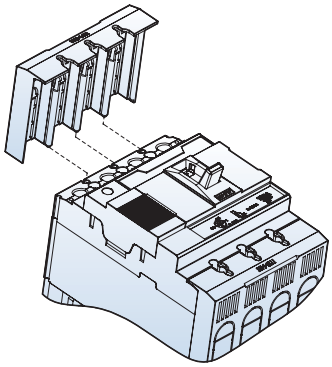

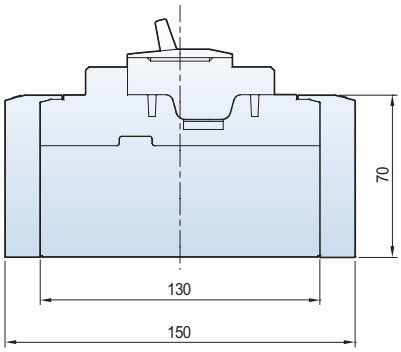

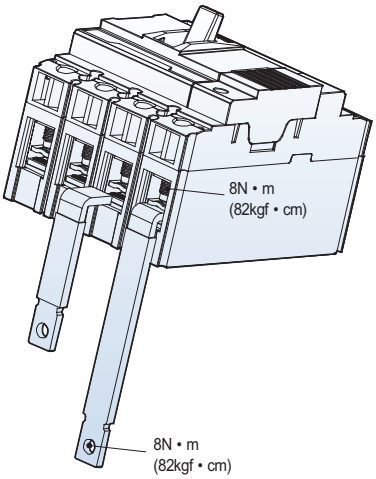

Extended terminal

ET13E, ET14E for TE100/160

[mm]

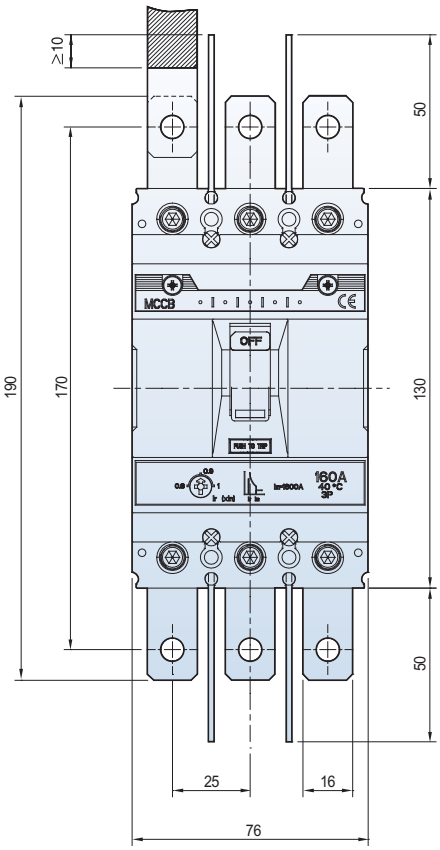

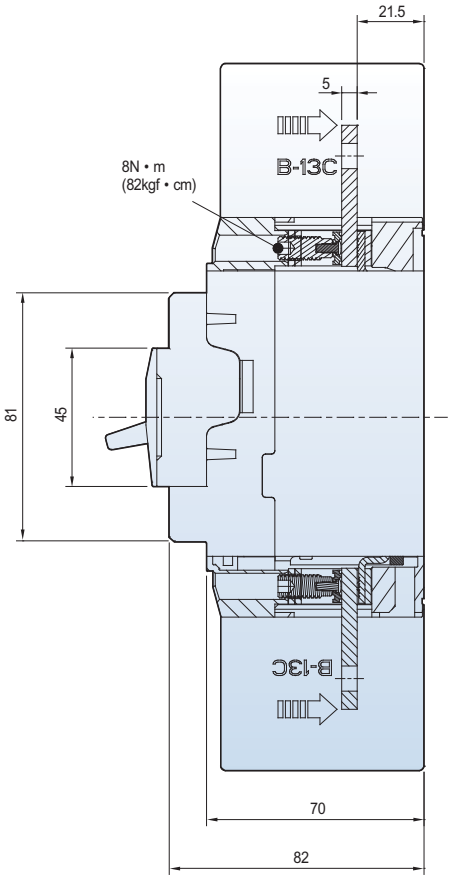

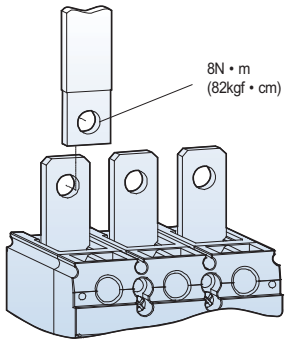

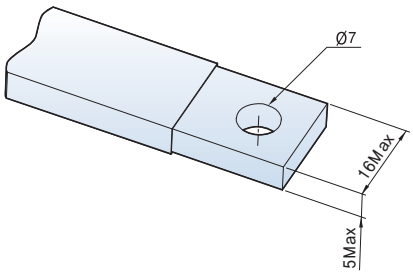

Rear terminals

[mm]

TD100
TD160

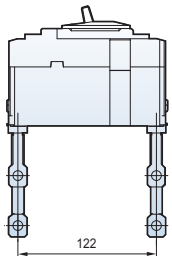

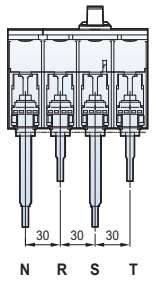

TS100
TS160
TS250

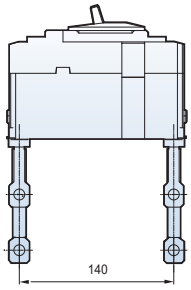

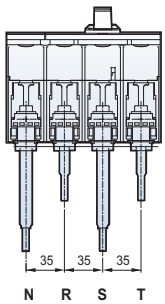

TS400
TS630

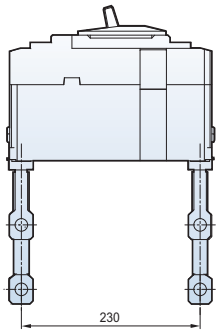

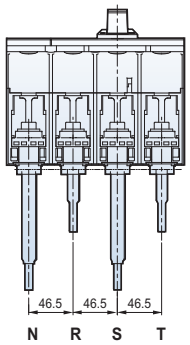

TS800

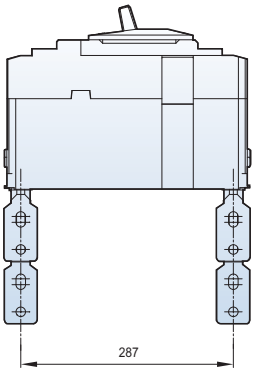

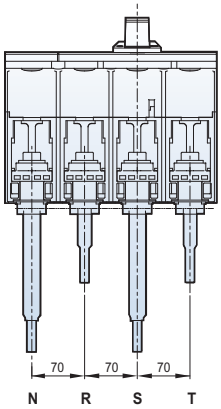

Rear terminals

TD100 / TD160

[mm]

Bar type

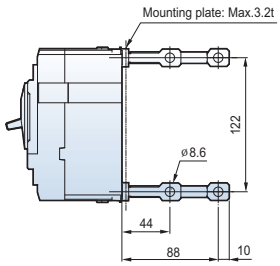

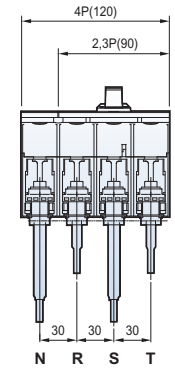

Round type

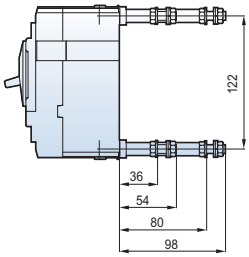

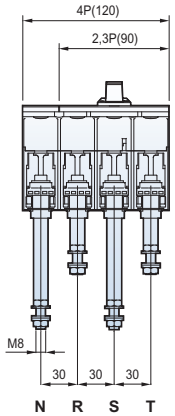

Panel drilling

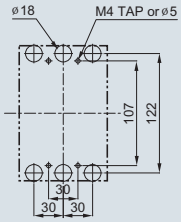

2, 3P

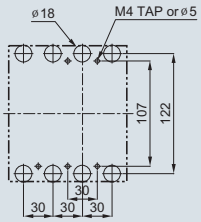

4P

Front panel cutting

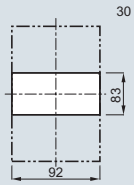

2, 3P

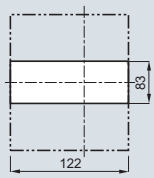

4P

Overall dimensions

Susol

Rear terminals

TS100 / TS160 / TS250

[mm]

Bar type

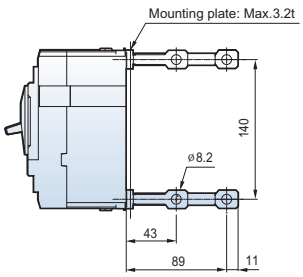

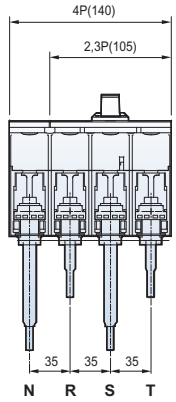

Round type

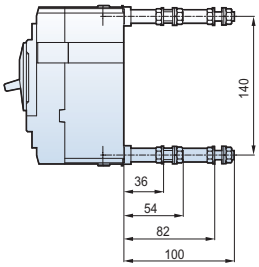

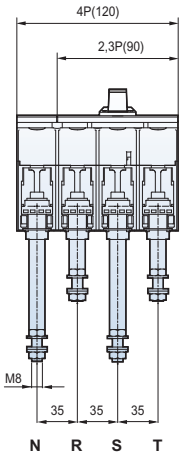

Panel drilling

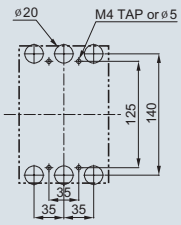

2, 3P

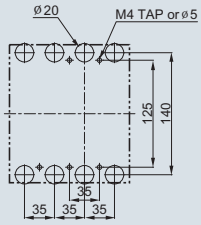

4P

Front panel cutting

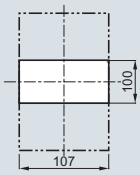

2, 3P

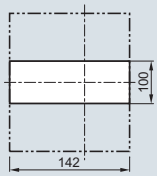

4P

Rear terminals

TS400 / TS630

[mm]

Bar type

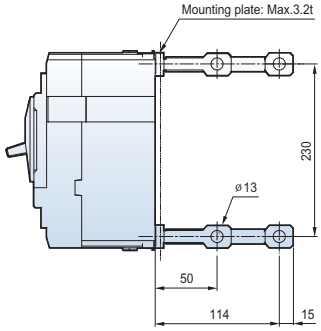

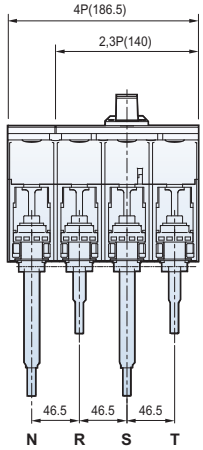

Panel drilling

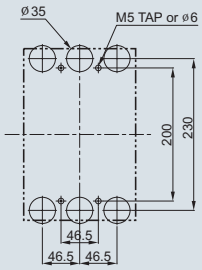

2, 3P

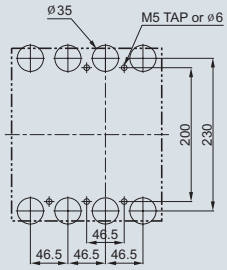

4P

Front panel cutting

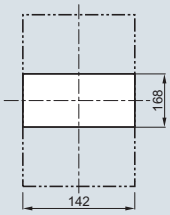

2, 3P

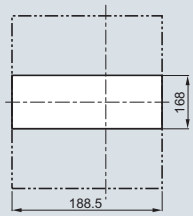

4P

Rear terminals

TS800

[mm]

Bar type

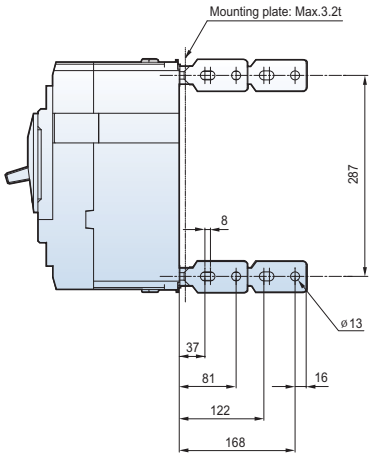

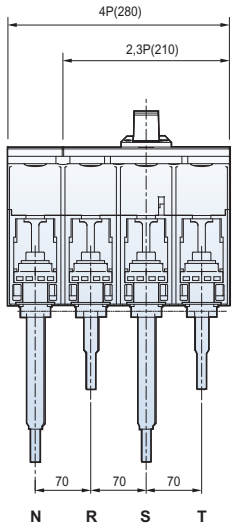

Panel drilling

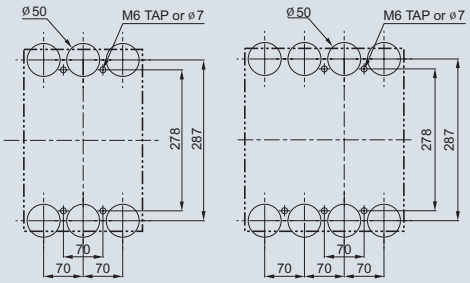

Front panel cutting

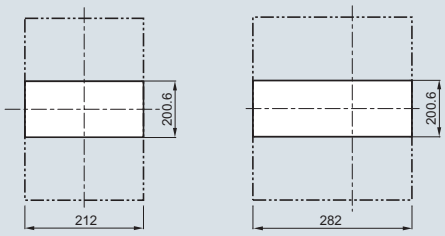

Circuit breaker with motor operator

MOP1, MOP2, MOP3, MOP4

[mm]

TD100N/H/L
TD160N/H/L

Circuit breaker with MOP1

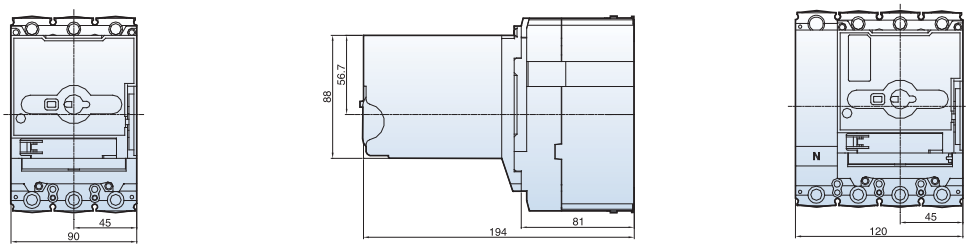

TS100N/H/L
TS160N/H/L
TS250N/H/L

Circuit breaker with MOP2

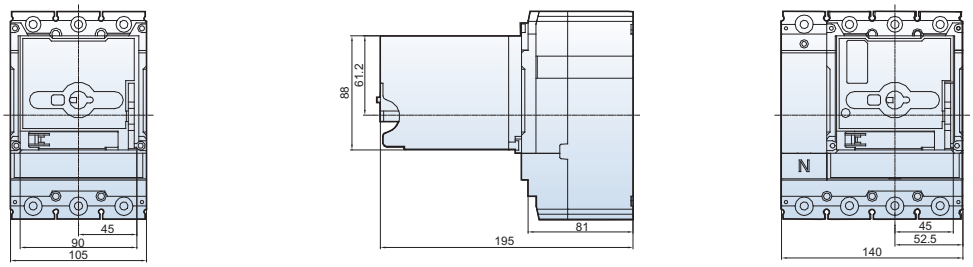

TS400N/H/L
TS630N/H/L

Circuit breaker with MOP3

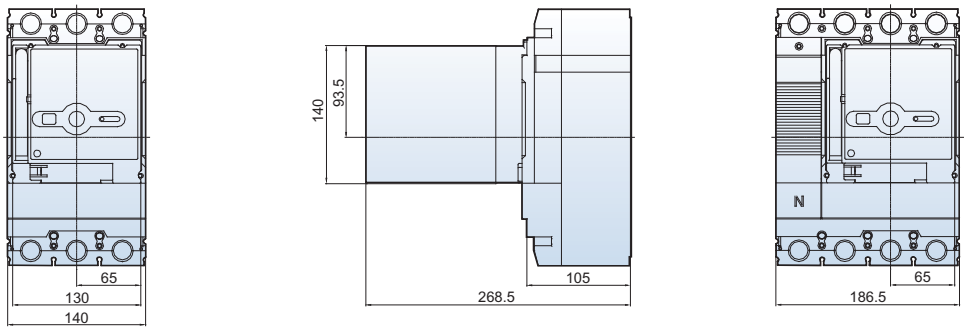

TS800N/H/L

Circuit breaker with MOP4

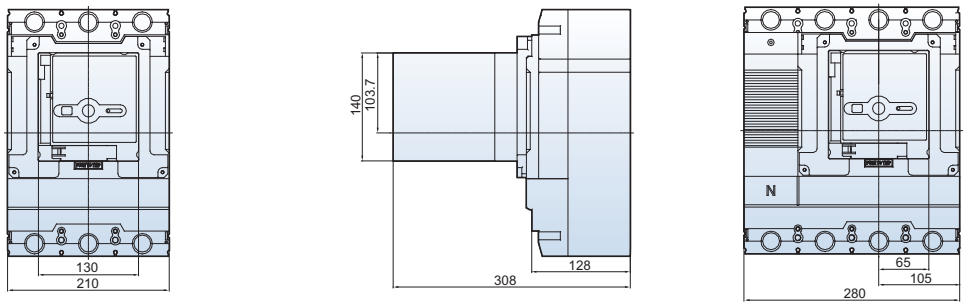

Wiring connection

Motor operator

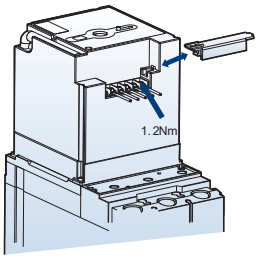

Standard connection

Circuit breaker On and Off controlled by remote operation and manual operation

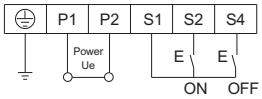

Connection with alarm switch (AL)

1) The below connection diagram is the method of using a alarm switch (AL) without shunt or undervoltage trip.
2) After clearing the fault surely, manual reset is mandatory in case of tripping due to an electrical fault.

Connection with FAL (only for the breakers with electronic trip unit ETS or ETM)

1) The below connection diagram is the method of using a FAL for circuit breakers with electronic trip unit.
2) After clearing the fault surely, manual reset is mandatory in case of tripping due to an electrical fault.

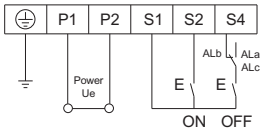

Wiring diagram(State of operation)

ETS23/ETS33/ETS43

The diagram is shown in the following conditions:

- Fixed version circuit-breaker (depending on type of circuit-breaker)
- Circuit breakers open.
- Releases not tripped

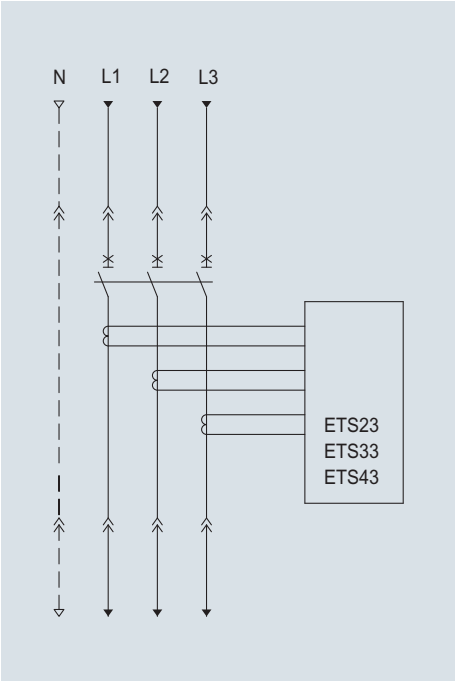

Three-pole circuit-breaker with
ETS23/ETS33/ETS43 electronic release

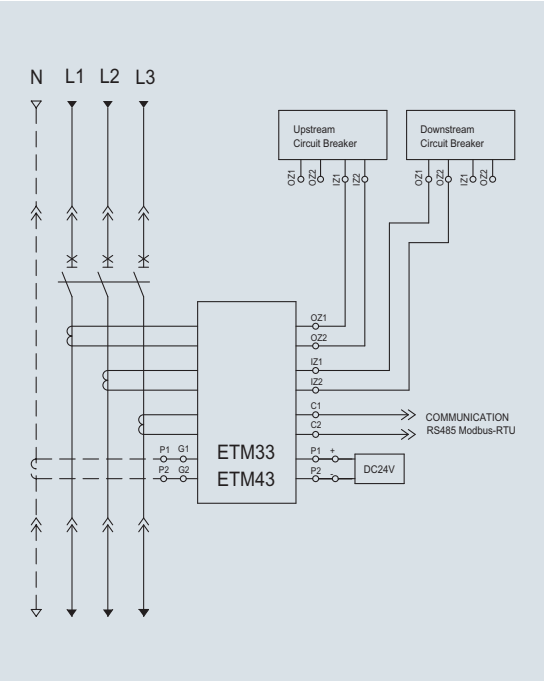

Three-pole circuit-breaker with
ETM33/ETM43 electronic release
(External natural current transformer)

Overall dimensions

Susol

TS 1000, 1250, 1600A

Front Type

[mm]

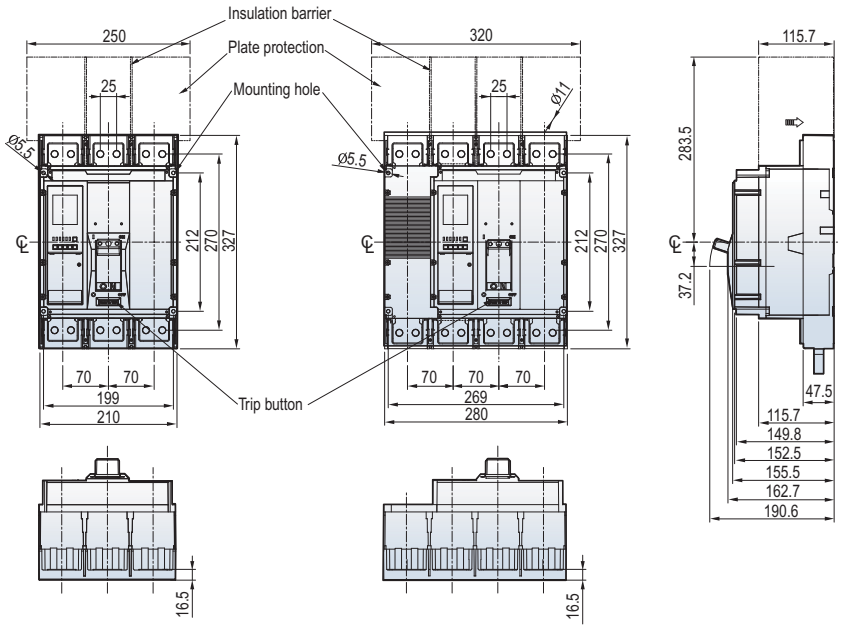

Panel drilling

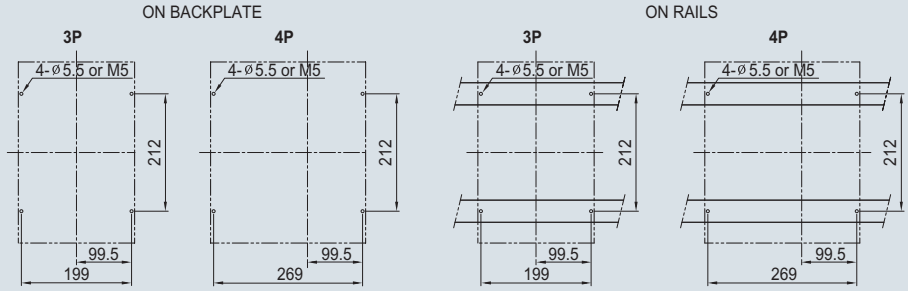

Front panel cutting

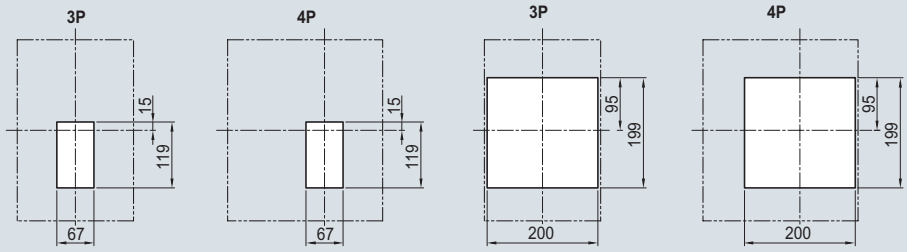

TS 1000, 1250, 1600A

Front Type Busbar

[mm]

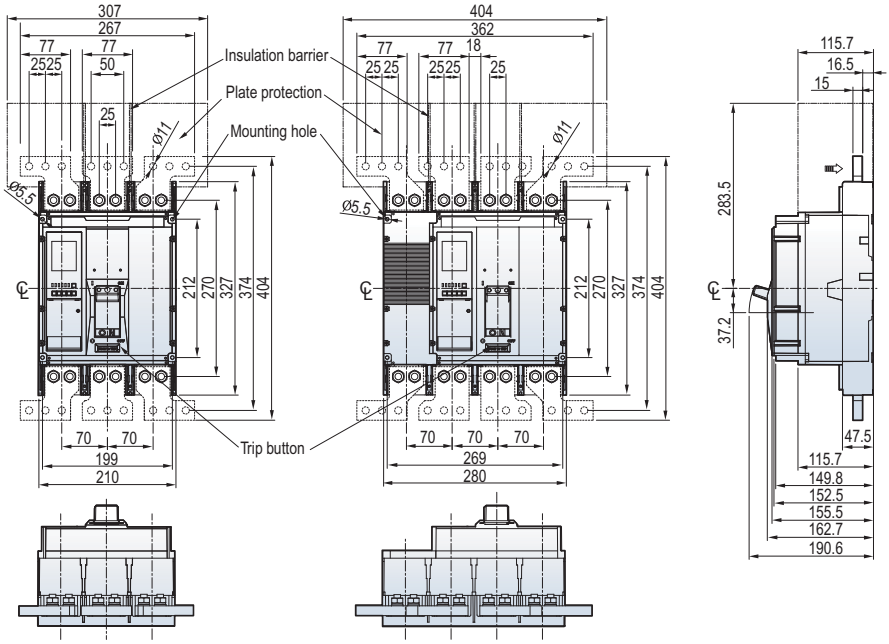

Panel drilling

ON RAILS

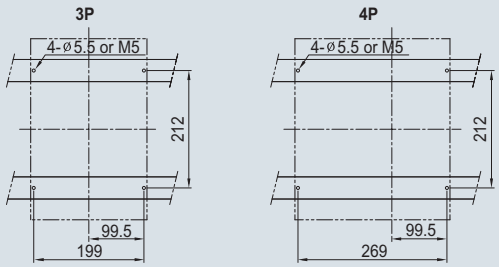

Front panel cutting

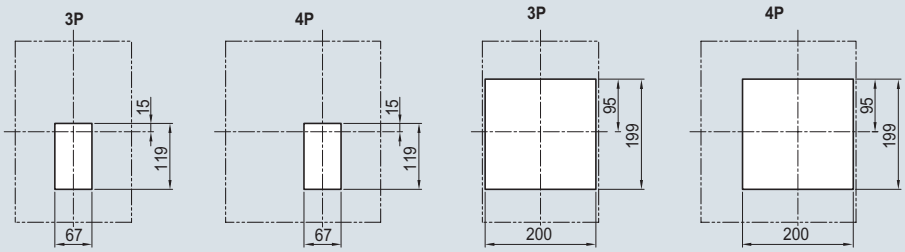

Overall dimensions

Susol

TS 1000, 1250, 1600A

Rear Type

[mm]

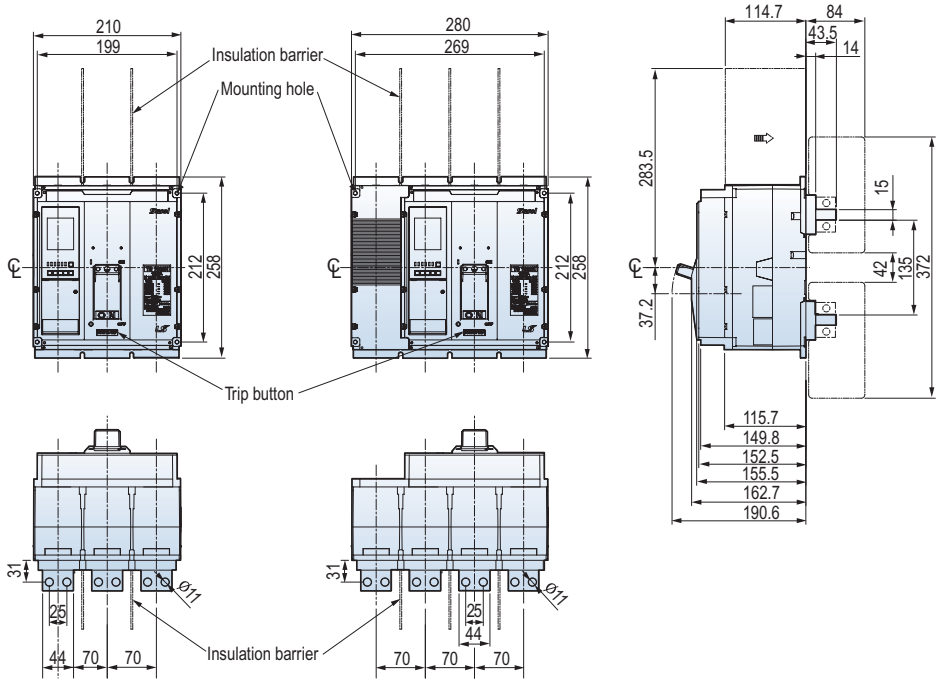

Panel drilling

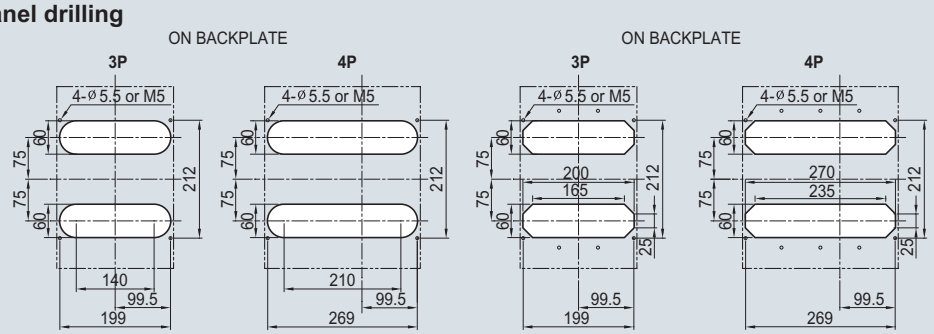

Front panel cutting

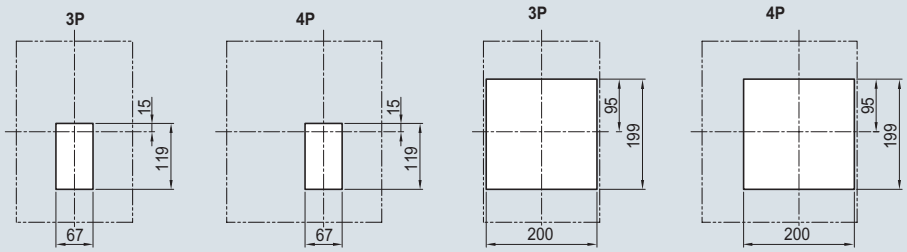

Rotary handles

Direct rotary handles for TS 1600AF

[mm]

A Type

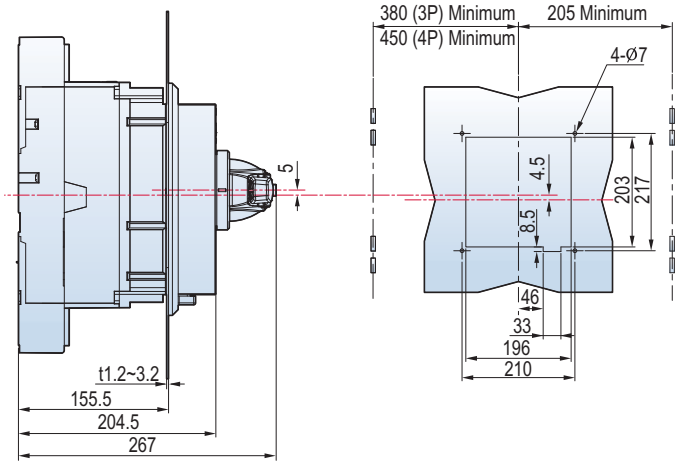

B Type

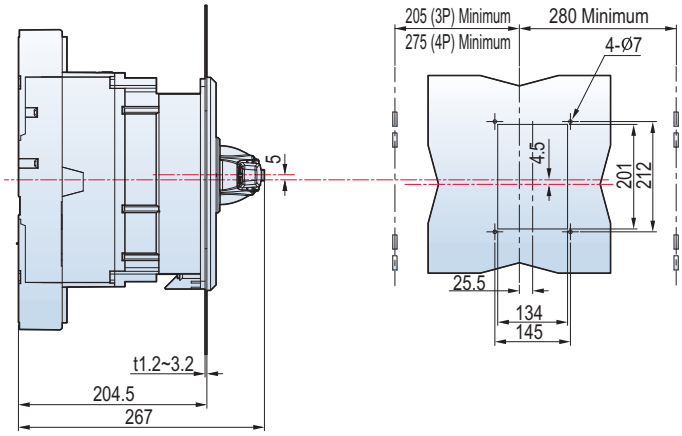

Extended rotary handle for TS 1600AF

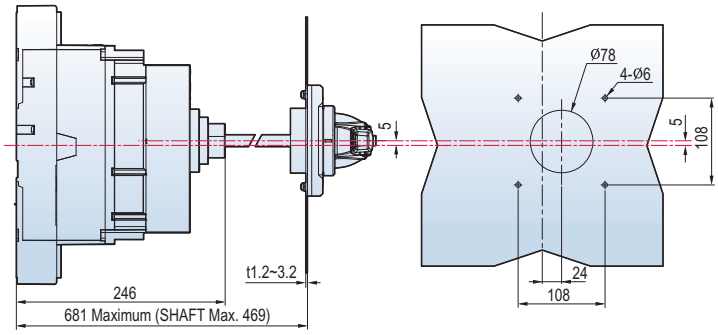

Locking devices

Mechanical interlock for TS 1600AF

[mm]

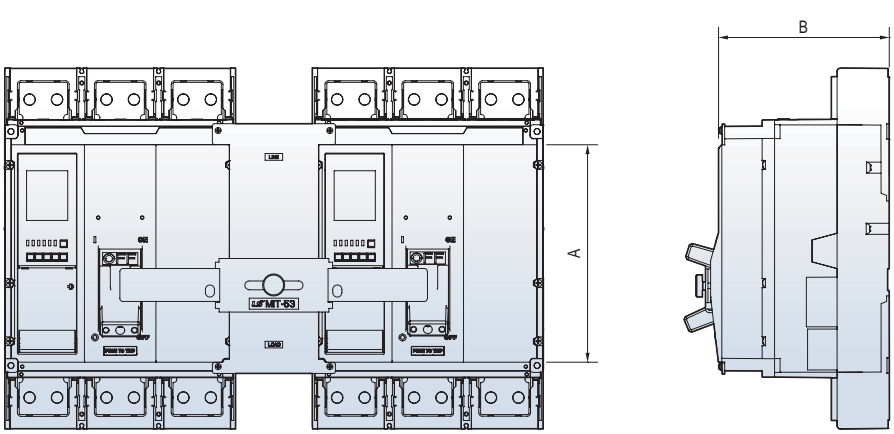

The cutting of Panel

3P C		D	E
TS1600	212	81	199

4P D		E
TS1600	11	269

The dimension of installation holes

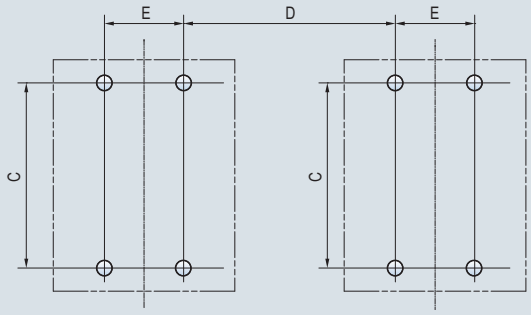

The cutting of Panel

3P C		D	E
TS1600	212	81	199

4P D		E
TS1600	11	269

Terminals

Front connection with bars for TS1600

[mm]

Top terminal

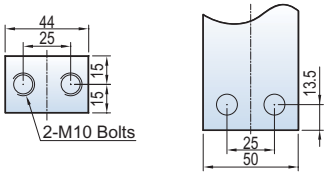

Bottom terminal

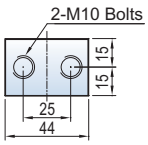

Rear connection with bars

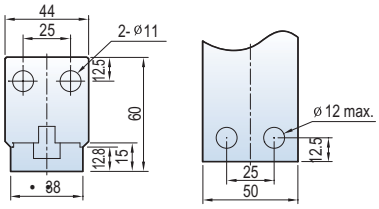

Connection with Busbar

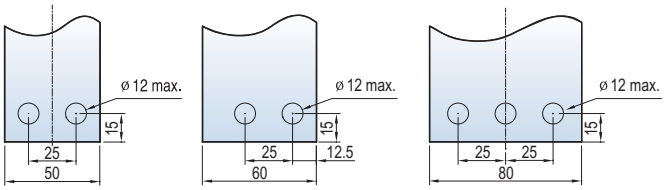

Middle busbar for 3P

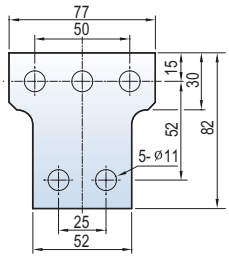

Left or right busbar for 3P

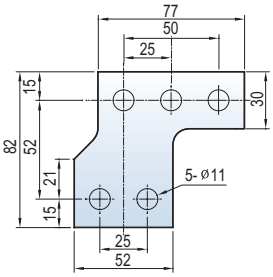

Middle left or middle right busbar for 4P

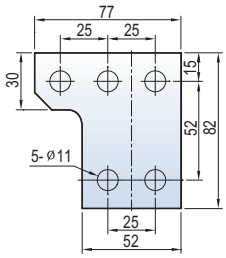

Left or right busbar for 4P

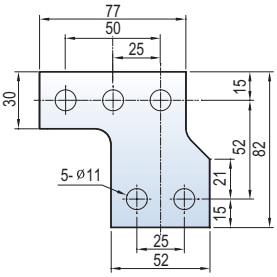

Terminals

Front or Rear connection with vertical busbar for TS1600

[mm]

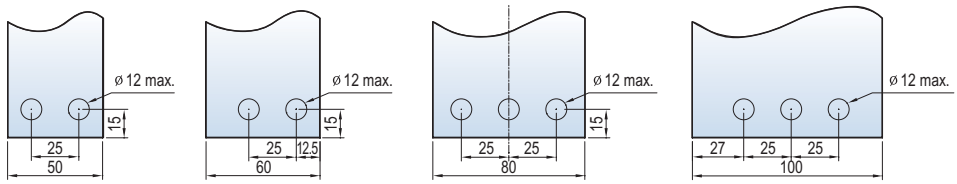

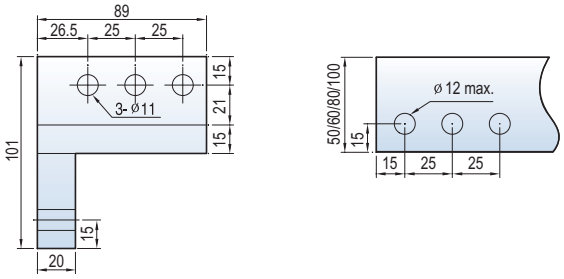

Extension Busbar

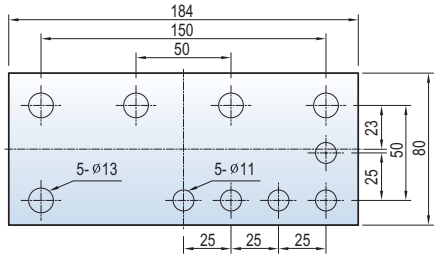

Overall dimensions (DC1000V PV MCCB)

TD160

Dimension of MCCB with short BUSBAR

[mm]

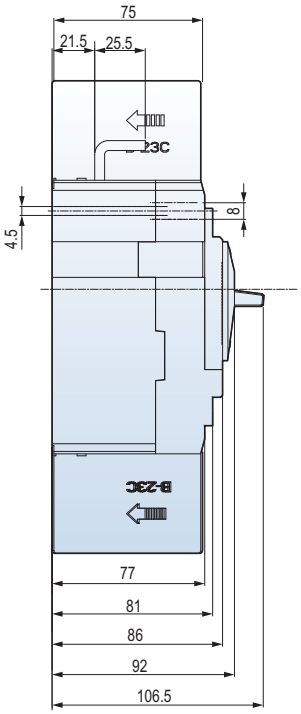

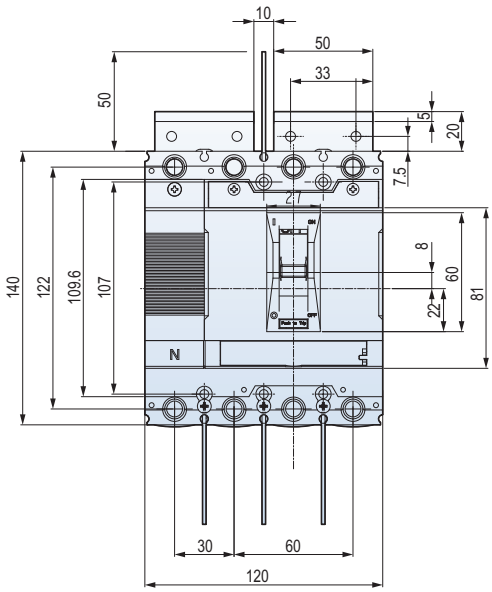

TS250

Dimension of MCCB with short BUSBAR

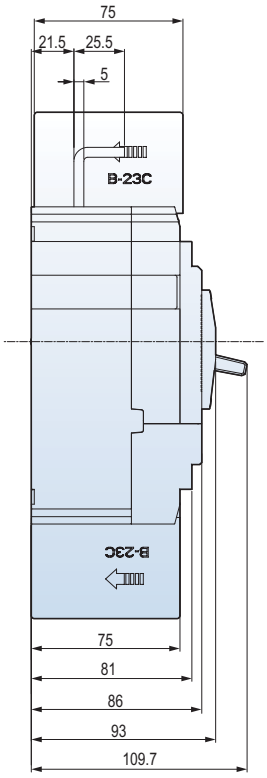

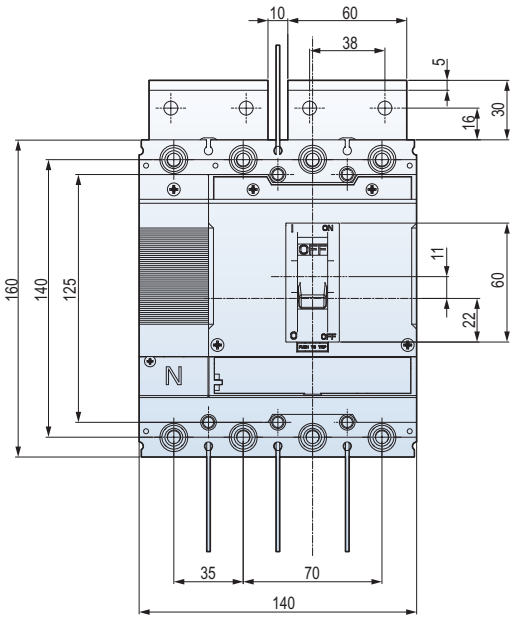

Overall dimensions (DC1000V PV MCCB)

TS630

Dimension of MCCB with short BUSBAR

[mm]

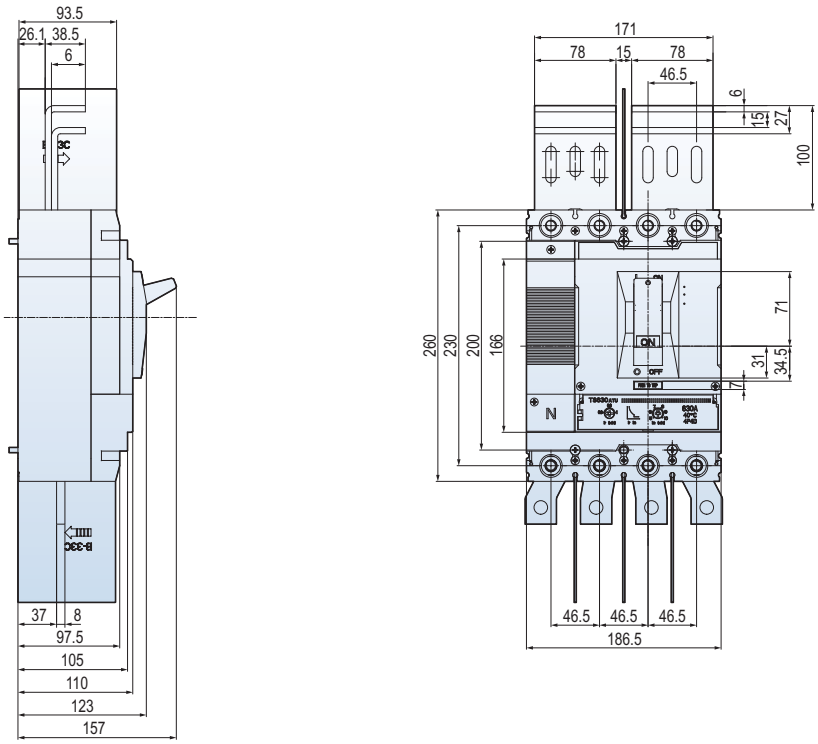

TS800

Dimension of MCCB with short BUSBAR

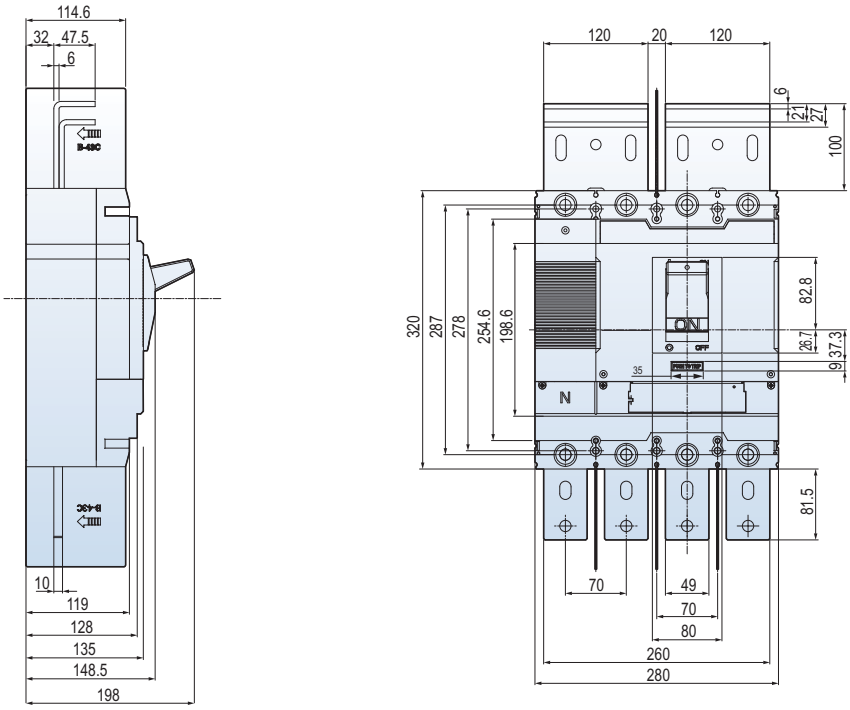

TD160

Short BUSBAR dimension

TD160 3t Short Busbar

[mm]

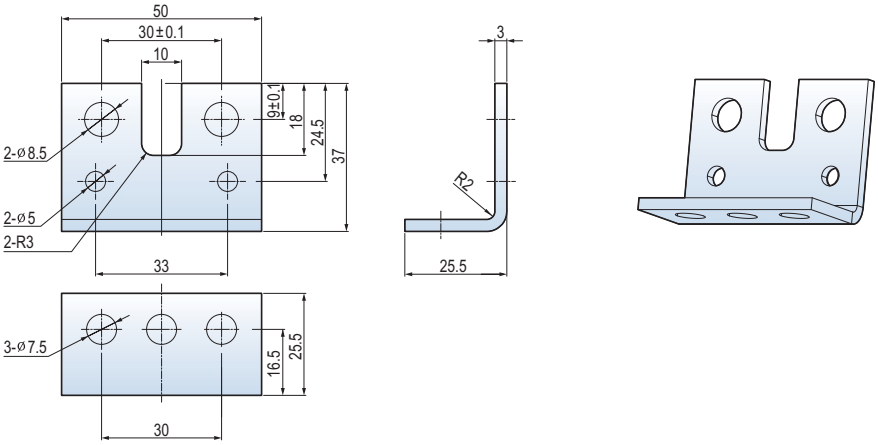

TD160 4t Short Busbar

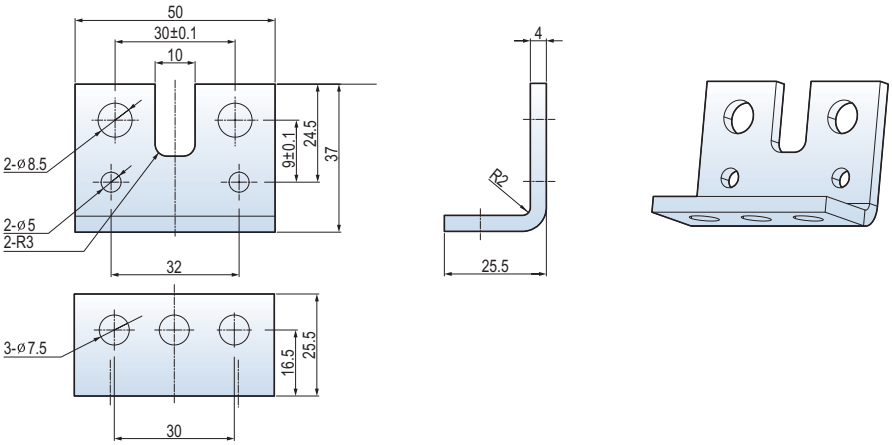

TD160 5t Short Busbar

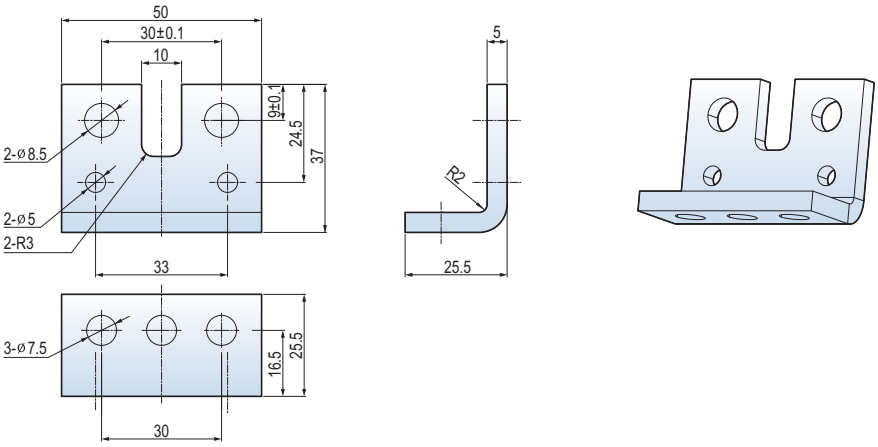

TS250

Short BUSBAR dimension

TS250 4t Short Busbar

[mm]

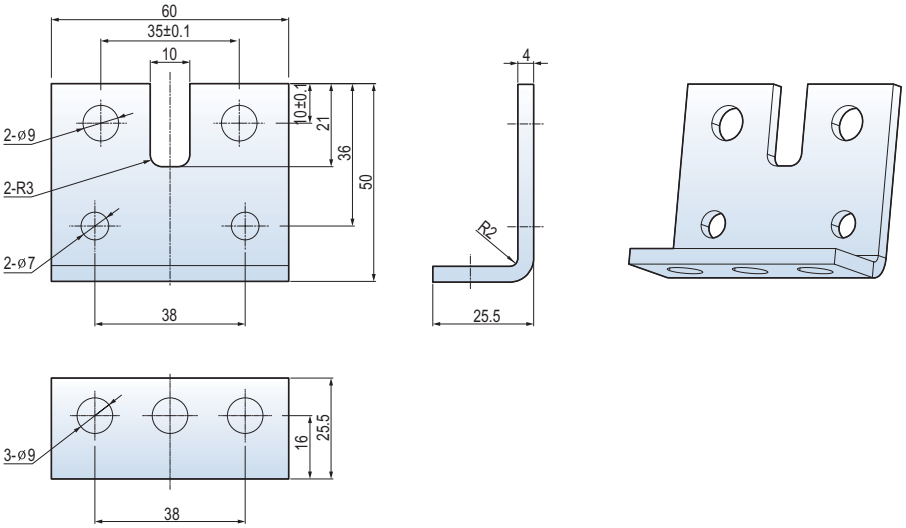

TD250 5t Short Busbar

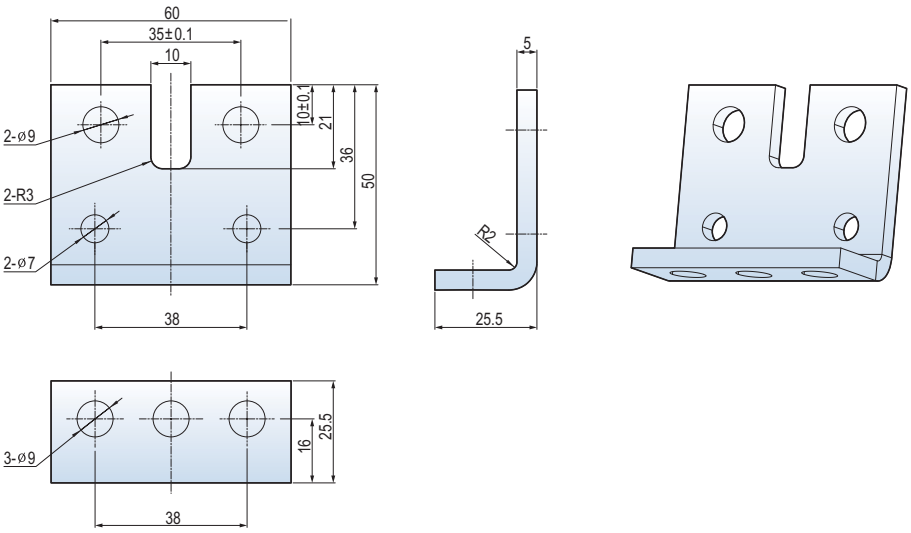

TS630

Short BUSBAR dimension

TS630 Lower Short Busbar

[mm]

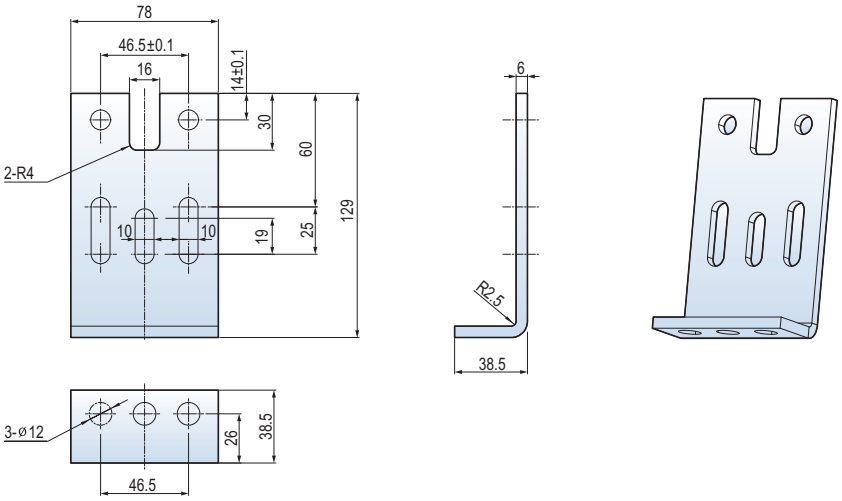

TS630 Upper Short Busbar

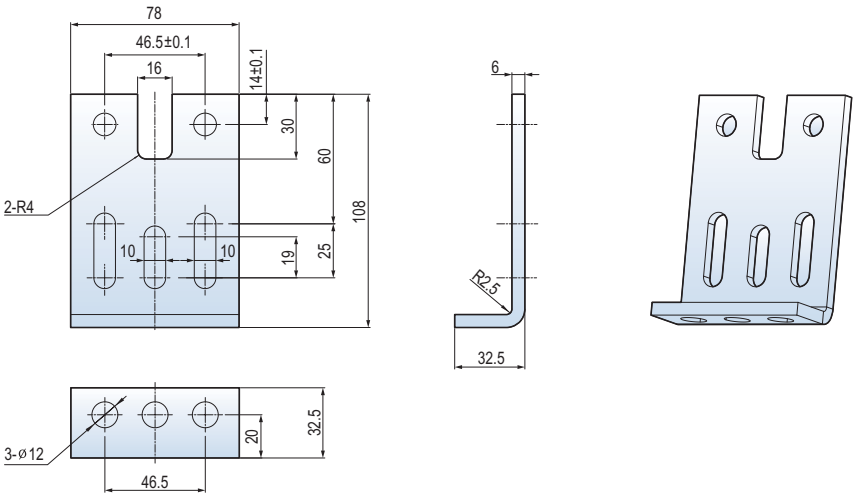

TS800

Short BUSBAR dimension

TS800 Lower Short Busbar

[mm]

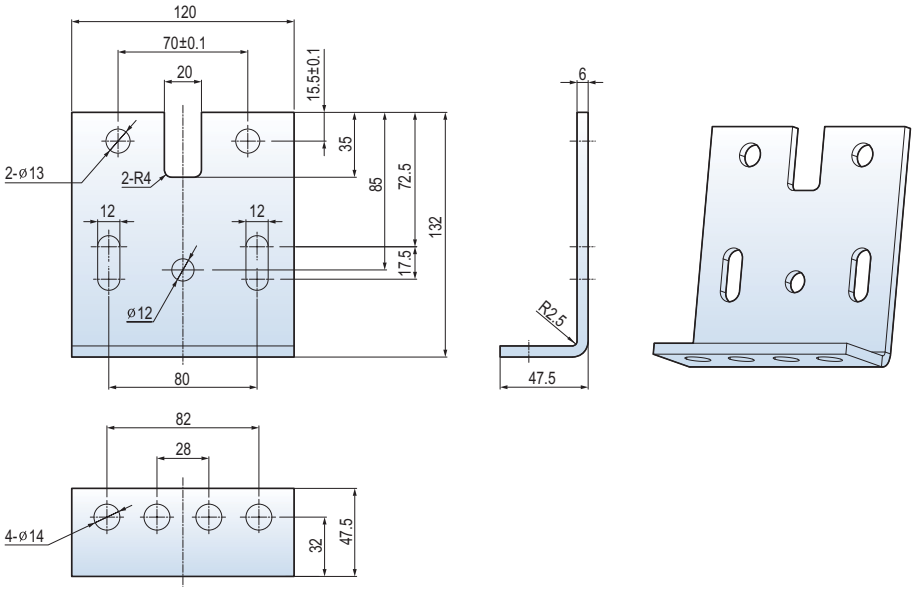

TS800 Upper Short Busbar

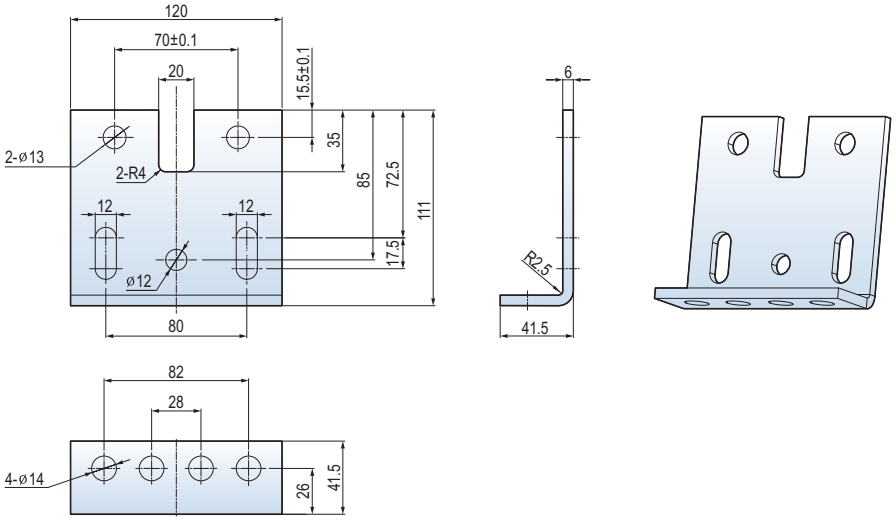

MCCB
Susol
TS 1600H
1600A
TS 250L
TS 630L
TS 160L

A-7. Technical information

Temperature derating

TD, TS series up to 1600A A-7-1

Power dissipation /Resistance

TD, TS series up to 1600A A-7-7

Application

Primary use of transformer A-7-8
Protection of lighting & heating circuits A-7-10
Protection of resistance welding circuits A-7-11
Use of circuit-breakers for capacitor banks A-7-12
Using circuit-breakers in DC networks A-7-15
Circuit breakers for 400Hz networks A-7-16
Protection of several kinds of loads A-7-18

Protective coordination

Discrimination & Cascading A-7-20
Cascading, network 220/240V A-7-21
Cascading, network 380/415V A-7-25
Motor protection cascading, network 220/240V A-7-30
Motor protection cascading, network 380/415V A-7-31
Protection discrimination table, Discrimination A-7-33
Motor protection discrimination table A-7-43
Type 2 Coordination according to IEC60947-4-1 ..... A-7-45

How to calculate short-circuit current value

Various short-circuit A-7-53
With percent impedance A-7-55
With a simple formula A-7-57
Calculation example A-7-59
Combination of transformer and impedance A-7-63
Various short-circuit A-7-64
Calculation example A-7-65
Calculation graph A-7-67

Temperature derating

A derating of the rated operational current of the Susol TD and TS molded case circuit breaker is necessary if the ambient temperature is greater than 40°C. Namely, when the ambient temperature is greater than 40°C, overload-protection characteristics are slightly modified.
Electronic trip units are not affected by variations in temperature.
But, the maximum permissible current in the circuit breaker depends on the ambient temperature.

Derating chart

- Connection type: Standard
- Trip unit: FTU, FMU, ATU

MCCB	Rating (A)	Fixed MCCB (c/w Thermal-magnetic trip unit)							
		10°C	20°C	30°C	40°C	45°C	50°C	60°C	70°C
TD100 TD160	16	16	16	16	16	16	15	14	13
	20	20	20	20	20	19	19	18	16
	25	25	25	25	25	24	23	22	21
	32	32	32	32	32	31	30	28	26
	40	40	40	40	40	39	38	35	33
	50	50	50	50	50	48	47	44	41
	63	63	63	63	63	61	59	56	52
	80	80	80	80	80	78	75	71	66
	100	100	100	100	100	97	94	88	82
	125	125	125	125	125	121	117	110	103
	160	160	160	160	160	155	150	141	131
TS100 TS160	40	40	40	40	40	39	38	35	33
	50	50	50	50	50	48	47	44	41
	63	63	63	63	63	61	59	56	52
	80	80	80	80	80	78	75	71	66
	100	100	100	100	100	97	94	88	82
	125	125	125	125	125	121	117	110	103
	160	160	160	160	160	155	150	141	131
TS250	200	200	200	200	200	194	188	176	164
	250	250	250	250	250	242	234	220	205
TS400	300	300	300	300	300	291	281	264	246
	400	400	400	400	400	388	375	353	328
TS630	500	500	500	500	500	484	469	441	410
	630	630	630	630	630	610	591	555	517
TS800	800	800	800	800	800	775	750	705	656

Note) TD160 1pole MCCB is not applied to temperature derating.

Temperature derating

Derating chart

- Connection type: Plug-in
- Trip unit: FTU, FMU, ATU

MCCB	Rating (A)	Fixed MCCB (c/w Thermal-magnetic trip unit)							
		10°C	20°C	30°C	40°C	45°C	50°C	60°C	70°C
TD100 TD160	16 16		16	16	16	16	15	14	13
	20 20		20	20	20	19	19	18	16
	25 25		25	25	25	24	23	22	21
	32 32		32	32	32	31	30	28	26
	40 40		40	40	40	39	38	35	33
	50 50		50	50	50	48	47	44	41
	63 63		63	63	63	61	59	56	52
	80 80		80	80	80	78	75	71	66
	100	100	100	100	100	97	94	88	82
	125 125		125	125	125	121	117	110	103
	160	160	160	160	160	155	150	141	131
TS100 TS160	40 40		40	40	40	39	38	35	33
	50 50		50	50	50	48	47	44	41
	63 63		63	63	63	61	59	56	52
	80	80	80	80	80	78	75	71	66
	100	100	100	100	100	97	94	88	82
	125	125	125	125	125	121	117	110	103
	160	160	160	160	160	155	150	141	131
TS250	200	200	200	200	200	194	188	176	164
	250	250	250	250	250	242	234	220	205
TS400	300	300	300	300	300	291	281	264	246
	400	400	400	400	400	388	375	353	328
TS630	500	500	500	500	500	484	469	441	410
	630	630	630	630	630	610	591	555	517
TS800	800	800	800	800	800	775	750	705	656

Size of busbar

Temperature derating

The table below indicates the maximum rated current value for each type of connection, depending on the ambient temperature.

Connection	Front or horizontal rear						
T 40		45	50	55	60	65	70
TS1000	800 800		800	800	800	800	800
	1000 1000		1000	1000	1000	1000	1000
TS1250 1250		1250	1250	1250	1250	1240	1090
TS1600 1600		1600	1560	1510	1470	1420	1360

Connection	Vertical rear						
T 40		45	50	55	60	65	70
TS1000	800 800		800	800	800	800	800
	1000 1000		1000	1000	1000	1000	1000
TS1250 1250		1250	1250	1250	1250	1250	1180
TS1600 1600		1600	1600	1600	1600	1510	1460

Derating table

The following tables are based on the following assumptions;
- T : Temperature around the circuit breaker and its connections

Note) 1. The values presented in the tables are the result of trials and theoretical calculations on the basis of the assumption mentioned above.
2. These tables are intended as an aid in designing connection, however, the actual values must be confirmed by tests on the installation.

TS1000 to TS1600 mounted
Using bar connection
- Cross section of bar: 1000 mm^2
- Limit of temperature rising at terminal connection: 70k

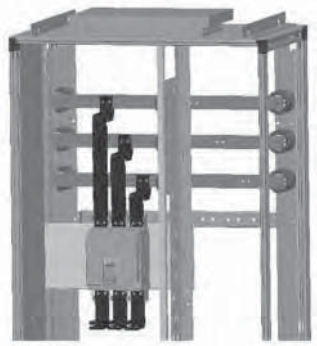

Using the data below, it is possible to determine the maximum permissible currents when making the connections to busbars for a Vertical, TS1000/TS1600, taking into account the ambient temperature around the switchboard and the IP value. Connection to be made according to the busbar drawings supplied.

Permissible current at switchboard condition using above external terminal connections

Model	T: 25°C	T:30°C	T:35°C	T:40°C	T:45°C	T:50°C
	IP40 IP40		IP40	IP40	IP40	IP40
TS1000 N/H/L	1000	1000	1000	1000	1000	1000
TS1250 N/H	1250	1250	1250	1250	1250	1250
TS1600 N/H	1350	1350	1300	1250	1200	1150

TS1000 to TS1600 mounted
Using busbar connecting
- Cross section of bar: 1000 mm^2
- Limit of temperature rising at terminal connection: 70k

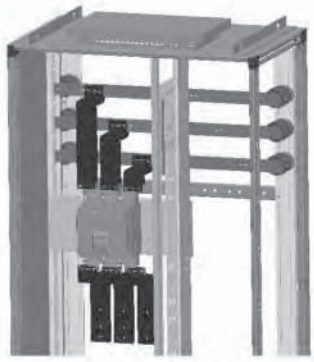

Permissible current at switchboard condition using above external terminal connections

Model	T: 25°C	T:30°C	T:35°C	T:40°C	T:45°C	T:50°C
	IP40 IP40		IP40	IP40	IP40	IP40
TS1000 N/H/L	1000	1000	1000	1000	1000	1000
TS1250 N/H	1250	1250	1250	1250	1250	1200
TS1600 N/H	1450	1400	1350	1300	1250	1200

Derating table

The following tables are based on the following assumptions;
- T : Temperature around the circuit breaker and its connections

Note) 1. The values presented in the tables are the result of trials and theoretical calculations on the basis of the assumption mentioned above.
2. These tables are intended as an aid in designing connection, however, the actual values must be confirmed by tests on the installation.

TS1000 to TS1600 mounted
using special external connections
- Cross section of bar: 1000 mm^2
- Limit of temperature rising at terminal connection: 70k

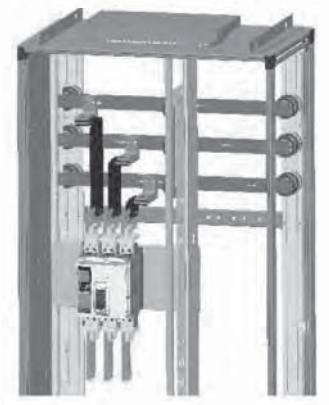

Using the data below, it is possible to determine the permissible current for a specified connection between TS1000/TS1600, fixed and busbars depending on the ambient temperature around the switchboard and the IP value.

Permissible current at switchboard condition using above external terminal connections

Model	T: 25°C	T:30°C	T:35°C	T:40°C	T:45°C	T:50°C
	IP40 IP40		IP40	IP40	IP40	IP40
TS1000 N/H/L	1000	1000	1000	1000	1000	1000
TS1250 N/H	1250	1250	1250	1250	1250	1250
TS1600 N/H	1600	1600	1600	1550	1500	1450

Installation recommendation

Protection degree provided by enclosures (IP Code) IEC 60529

IP □ □

- First characteristic numeral ×(numerals 0 to 6, or letter ×)
- Second characteristic numeral ×(numerals 0 to 8, or letter ×)
- Code letters (international Protection)

First characteristic numeral

	Degree of protection	
	Brief description	Definition
0 Non-protected		-
1	Protected against solid foreign objects of 50mm Ø and greater	The object probe sphere of 50mm Ø, shall not fully penetrate
2	Protected against solid foreign objects of 12.5mm Ø and greater	The object probe sphere of 12.5mm Ø, shall not fully penetrate
3	Protected against solid foreign objects of 2.5mm Ø and greater	The object probe sphere of 2.5mm Ø, shall not penetrate at all
4	Protected against solid foreign objects of 1.0mm Ø and greater	The object probe of 1.0mm Ø, shall not penetrate at all
5	Dust-protected	Ingress of dust is not totally prevented, but dust shall not penetrate in a quantity to interfere with satisfactory operation of the apparatus or to impair safety
6	Dust-tight	No ingress of dust

Second characteristic numeral

	Degree of protection	
	Brief description	Definition
0 Non-protected		-
1	Protected against vertically falling water drops	Vertically falling drops shall have no harmful effects
2	Protected against vertically falling water drops when enclosure tilted up to 15°	Vertically falling drops shall have no harmful effects when the enclosure is tilted at any angle up to 15° on either side of the vertical
3	Protected against spraying water	Water sprayed at an angle up to 60° on wither side of the vertical shall have no harmful effects
4	Protected against spraying water	Water splashed against the enclosure from and direction shall have no harmful effects
5	Protected against spraying jets	Water projected in powerful jets against the enclosure from and direction shall have no harmful effects
6	Protected against powerful water jets	Water projected in powerful jets against the enclosure from any direction shall have no harmful effects
7	Protected against the effects of temporary immersion in water	Ingress of water in quantities causing harmful effects shall not be possible when the enclosure is temporarily immersed in water under standardized conditions of pressure and time
8	Protected against the effects of continuous immersion in water	Ingress of water in quantities causing harmful effects shall not be possible when the enclosure is continuously immersed in water under conditions which shall be agreed between manufacturer and used but which are more severs than for numeral 7

Power dissipation / Resistance

Susol TD & TS series up to 1600A

	AF	TD100 (3P & 4P)								
	Rating (A)	16	20	25	32	40	50	63	80	100
Fixed MCCB	R (mΩ)	5.60	5.60	3.80	3.80	1.84	1.34	1.10	0.91	0.70
	Watt single pole	1.43	2.24	2.38	3.89	2.94	3.35	4.37	5.82	7.00
	Watt three poles	4.30	6.72	7.13	11.67	8.83	10.05	13.10	17.47	21.00
Plug-in MCCB	R (mΩ)	5.68	5.68	3.88	3.88	1.92	1.42	1.18	0.99	0.78
	Watt single pole	1.45	2.27	2.43	3.97	3.07	3.55	4.68	6.34	7.80
	Watt three poles	4.36	6.82	7.28	11.92	9.22	10.65	14.05	19.01	23.40

	AF	TD160 (3P & 4P)		
	Rating (A)	100	125	160
Fixed MCCB	R (mΩ)	0.70	0.61	0.50
	Watt single pole	7.00	9.53	12.80
	Watt three poles	21.00	28.59	38.40
Plug-in MCCB	R (mΩ)	0.78	0.69	0.58
	Watt single pole	7.80	10.78	14.85
	Watt three poles	23.40	32.34	44.54

	AF	TS100,TS160,TS250 (3P & 4P)								
	Rating (A)	40	50	63	80	100	125	160	200	250
Fixed MCCB	R (mΩ)	3.37	2.86	2.86	1.36	0.96	0.76	0.62	0.52	0.25
	Watt single pole	5.39	7.15	11.35	8.70	9.60	11.88	15.87	20.80	15.79
	Watt three poles	16.18	21.45	34.05	26.11	28.80	35.63	47.62	62.40	47.38
Plug-in MCCB	R (mΩ)	3.43	2.92	2.92	1.42	1.02	0.82	0.68	0.58	0.31
	Watt single pole	5.49	7.30	11.59	9.09	10.20	12.81	17.41	23.20	19.54
	Watt three poles	16.46	21.90	34.77	27.26	30.60	38.44	52.22	69.60	58.63

	AF	TS400, TS630 (3P, 4P)				TS800 (3P, 4P)	
	Rating (A)	300	400	500	630	700	800
Fixed MCCB	R (mΩ)	0.30	0.30	0.26	0.21	0.12	0.12
	Watt single pole	26.82	47.68	65.25	83.35	73.81	73.81
	Watt three poles	80.46	143.04	195.75	250.05	221.44	221.44
Plug-in MCCB	R (mΩ)	0.34	0.34	0.30	0.25	0.14	0.14
	Watt single pole	30.42	54.08	75.25	99.23	86.61	86.61
	Watt three poles	91.26	162.24	225.75	297.68	259.84	259.84

	AF	TS1000N/H, TS1250N/H, TS1600N/H					TS1000L		
	Rating (A)	630	800	1000	1250	1600	630	800	1000
Fixed MCCB	R (mΩ)	0.027	0.027	0.027	0.027	0.027	0.046	0.046	0.046
	Watt single pole	10.7	17.3	27.8	45.1	76.0	18.3	30.0	48.3
	Watt three poles	32.1	51.8	83.4	135.4	228.1	54.8	90.1	144.9

- Power dissipated per pole (P/pole): Watts (W).
- Resistance per pole (R/pole): Milliohms (mΩ) (measured cold).
- Total power dissipation is the value measured at In, 50/60 Hz, for a 3 pole or 4 pole circuit breaker (Power= $3I^2R$)

Application
Primary use of transformer

Application for transformer protection

Transformer excitation surge current may possibly exceed 10 times rated current, with a danger of nuisance tripping of the MCCB. The excitation surge current will vary depending upon the supply phase angle at the time of switching, and also on the level of core residual magnetism.

So, it's recommended to select proper circuit breakers according to the continuous current carrying capacity of transformer. It requires to consider separately whether transformer is single phase or three phase. The below table indicates the proper molded case circuit breaker suitable for each transformer.

AC220V

Capacity of 3 phase transformer (kVA)		Below 1500	Below 1500	Below 2000	Below 3000
Capacity of single phase transformer (kVA)		Below 300	-		
Breaking capacity (kA) (sym)		42	85	100	120 200
Frame (A)	100	TD100N	TD100H TS100N TS100L	TS100H	TD100L
	160	TD160N	TD160H TS160N TS160L	TS160H	TD160L
	250	TS250N TS250H			TS250L
	400	TS400N TS400H			TS400L
	630	TS630N		TS630H	TS630L
	800	TS800N		TS800H	TS800L

AC460V

Capacity of 3 phase transformer (kVA)		Below 2000	Below 3000	Below 4000
Breaking capacity (kA) (sym)		50 65 70	85 100	130
Frame (A)	100	TD100N TD100H TS100N TS100H	TD100L TS100L	
	160	TD160N TD160H TS160N TS160H	TD160L TS160L	
	250	TS250N TS250H	TS250L	
	400	TS400N	TS400H TS400L	
	630	TS630N	TS630H TS630L	
	800	TS800N	TS800H	TS800L

Application
Primary use of transformer

Application for transformer protection (MCCBs for Transformer-Primary Use)

Transformers are used to change in the supply voltage, for both medium and low voltage supplies. The choice of the protection devices should be considered transient insertion phenomena, during which the current may reach values higher than the rated full load current; the phenomenon decays in a few seconds.

The peak value of the first half cycle may reach values of 15 to 25 times the effective rated current. For a protective device capable of protecting these units this must be taken into account. Manufacturers data and tests have indicated that a protective device feeding a transformer must be capable of carrying the following current values without tripping.

TD100/160, TS100~800 equipped with Thermal magnetic trip units

Transformer ratings (kVA)			MCCB rated current (A)	Trip unit
1 phase 230V	3 phase 230V 1 phase 240V	1 phase 230V		
3 to 4	5 to 6	9 to 11	16	FTU FMU ATU
4 to 5	6 to 8	11 to 14	20	
5 to 6	8 to 10	14 to 17	25	
6 to 7	10 to 13	18 to 22	32	
7 to 9	13 to 16	22 to 28	40	
9 to 12	16 to 20	28 to 35	50	
12 to 14	20 to 25	35 to 44	63	
15 to 18	26 to 32	44 to 55	80	
18 to 23	32 to 40	55 to 69	100	
23 to 29	40 to 50	69 to 87	125	
29 to 37	51 to 64	89 to 111	160	
37 to 47	64 to 80	111 to 138	200	
46 to 58	80 to 100	138 to 173	250	
55 to 69	96 to 120	166 to 208	300	
74 to 92	128 to 160	221 to 277	400	
92 to 115	160 to 200	277 to 346	500	
116 to 145	202 to 252	349 to 436	630	
129 to 161	224 to 280	388 to 484	700	
147 to 184	256 to 320	443 to 554	800	

TS100~800 equipped with electronic trip units

Transformer ratings (kVA)			MCCB rated current (A)	Trip unit	Ir max setting
1 phase 230V	3 phase 230V 1 phase 400V	3 phase 400V			
4 to 7	6 to 13	11 to 22	40	ETS ETM	0.8
9 to 19	16 to 32	27 to 56	100		0.8
15 to 30	25 to 52	44 to 90	160		0.8
23 to 46	40 to 80	70 to 139	250		0.8
37 to 74	64 to 128	111 to 222	400		0.8
58 to 115	100 to 200	175 to 346	630		0.8
74 to 184	127 to 319	222 to 554	800		1

Application
Protection of lighting & heating circuits

In the lighting & heating circuits, switching-surge magnitudes and times are normally not sufficient to cause serious tripping problems. But, in some cases, such as incandescent lamps, mercury arc lamps, metal halide and sodium vapour, or other large starting-current equipment, the proper selection should be considered.

Upon supply of a lighting installation, for a brief period an initial current exceeding the rated current (corresponding to the power of the lamps) circulates on the network. This possible peak has a value of approximately 15 ÷ 20 times the rated current, and is present for a few milliseconds; there may also be an inrush current with a value of approximately 1.5 ÷ 3 times the rated current, lasting up to some minutes. The correct dimensioning of the switching and protection devices must take these problems into account. Generally, it is recommended to make the maximum operating current not to exceed 80% of the related current.

AC220V

The maximum operating current (A)	The rated current of MCCB (A)	Breaking capacity (kA) sym 85	100	120	200
12	16	TD100N	TD100H	TD100L	
16 20					
20 25					
25 32					
32 40					
40 50			TD100H TS100N	TD100L TS100H	TD100L TS100L
50 63					
64 80					
80 100					
100 125		TD160N	TD160H TS160N	TS160H	TD160L TS160L
128 160					
160 200		TS250N TS250H			TS250L
200 250					
240 300		TS400N TS400H			TS400L
320 400					
400 500		TS630N TS630H			TS630L
504 630					
560 700		TS800N TS800H			TS800L
640 800					

AC460V

The maximum operating current (A)	The rated current of MCCB (A)	Breaking capacity (kA) sym 50	65	70	85	100	130
12	16	TD100N TS100N	TD100H TS100H	TD100L TS100L			
16 20							
20 25							
25 32							
32 40							
40 50							
50 63							
64 80							
80 100							
100 125		TD160N TS160N	TD160H TS160H	TD160L TS160L			
128 160							
160 200		TS250N	TS250H TS250L				
200 250							
240 300		TS400N TS400H				TS400L	
320 400							
400 500		TS630N TS630H				TS630L	
504 630							
560 700		TS800N		TS800H			TS800L
640 800							

Application
Protection of resistance welding circuits

Short circuit protection for resistance welding devices can be obtained by applying molded case circuit breaker properly. These breakers permit normally high welding currents, but trip instantaneously if a short circuit develops.
It's recommended to select proper circuit breaker according to the characteristics of welding devices as the follow table.

Characteristics of welding device		Applied circuit breaker (MCCB 2P)	
Capacity (kVA)	Maximum input (kVA)	220V (Single phase)	400V (Single phase)
15 35		TD100N/H/L 100A TS100N/H/L 100A TD160N/H/L 100A TS160N/H/L 100A	TD100N/H/L 50A TS100N/H/L 50A
30 65		TD160N/H/L 125A TS160N/H/L 125A TS250N/H/L 125A	TD100N/H/L 100A TS100N/H/L 100A TD160N/H/L 100A TS160N/H/L 100A
55	140	TS250N/H/L 250A	TD160N/H/L 125A TS160N/H/L 125A TS250N/H/L 125A

Application
Use of circuit-breakers for capacitor banks

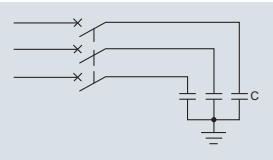

Capacitor circuit

Application for protection of capacitor circuit

In order to reduce system losses (less than 0.5W/kvar in low voltage) and voltage drops in the power distribution system, reactive power compensation or power factor correction is generally undertaken. As a result, the power fed into the system is used as active power and costs will be saved through a reduction in the capacitive and inductive power factors. The compensation can be carried out by the fixed capacitors and automatic capacitor banks. However, the disadvantages of installing capacitors are sensitivity to over-voltages and to the presence of nonlinear loads.

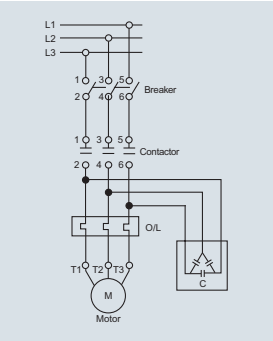

Examples of equipment which consume reactive energy are all those receivers which require magnetic fields or arcs in order to operate, such as:

- Asynchronous motors: An asynchronous motor is a large consumer of inductive reactive energy. The amount of reactive power consumed is between 20% and 25% of the rated power of the motor (depending on its speed).

- Power Transformers: Power transformers are normally always connected. This means that reactive energy is always consumed. Also, as a consequence of its inductive nature, the reactive energy increases when the transformer is loaded.

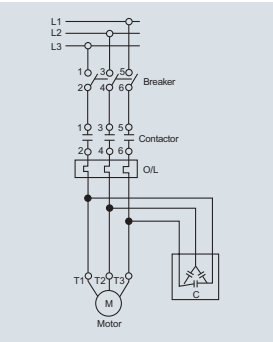

- Discharge lamps, Resistance-type soldering machines, Dielectric type heating ovens, Induction heating ovens, Welding equipments, Arc furnaces

At the instant of closing a switch to energize a capacitor, the current is limited only by the impedance of the network upstream of the capacitor, so that high peak values of current will occur for a brief period, rapidly falling to normal operating values.

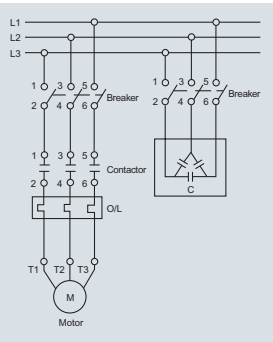

Usual connection diagram

According to the relevant standards IEC 60831-1/IEC 70, capacitors must function under normal operating conditions with the current having a RMS value up to 1.3 times the rated current of the capacitor. Additionally, a further tolerance of up to 15% of the real value of the power must be taken into consideration. The maximum current with which the selected circuit-breaker can be constantly loaded, and which it must also be able to switch, is calculated as follows:

Maximum expected rated current= Rated current of the capacitor bank × 1.5 (RMS value)

Application
Use of circuit-breakers for capacitor banks

220V, 50/60Hz Circuit

Capacitor rating kVAR	Single-phase circuit		Three-phase circuit	
	Capacitor rated current (A)	MCCB rated current (A)	Capacitor rated current (A)	MCCB rated current (A)
5 22.7		40	13.1	20
10 45.5		80	26.2	40
15 68.2		125	39.4	63
20 90.9		160	52.5	80
25 113.6		200	65.6	100
30	136.4 225		78.7	125
40 181.8		300	105.0	160
50 227.3		400	131.2	200
75 340.9		630	196.8	300
100 454.5		700	262.4	400
150 681.8		-	393.7	630
200 909.1		-	524.9	800
300 1363.6		-	787.3	-
400 1818.2		-	1049.8	-

Notes) 1. The MCCB rated current should be approx. 150% of the capacitor rated current.
2. The MCCB short-circuit capacity should be adequate for the circuit short-circuit capacity.

Application
Use of circuit-breakers for capacitor banks

440V, 50/60Hz Circuit

Capacitor rating kVAR	Single-phase circuit		Three-phase circuit	
	Capacitor rated current (A)	MCCB rated current (A)	Capacitor rated current (A)	MCCB rated current (A)
5 11.4		20	6.6	16
10 22.7		40	13.1	20
15 34.1		63	19.7	32
20 45.5		80	26.2	40
25 56.8		100	32.8	50
30 68.2		125	39.4	63
40 90.9		160	52.5	80
50 113.6		200	65.6	100
75 170.5		300	98.4	160
100 227.3		400	131.2	200
150 340.9		500	196.8	300
200 454.5		700	262.4	400
300	681.8	-	393.7	630
400 909.1		-	524.9	800

Notes) 1. The MCCB rated current should be approx. 150% of the capacitor rated current.
2. The MCCB short-circuit capacity should be adequate for the circuit short-circuit capacity.

Application
Using circuit-breakers in DC networks

Susol circuit-breakers for protection of power distribution with thermal overload and magnetic short-circuit trip units are suitable for usage in DC networks.
The circuit-breakers with electronic overcurrent releases are not suitable for DC networks.

Circuit-breaker selection criteria

The followings are the most important criteria for selection of suitable circuit breaker for DC networks.

- The rated current determines the rating and size of the circuit-breaker (Equipment)
- The rated voltage determines the number of poles in series necessary for breaking
- The maximum short-circuit current at the connection point determines the breaking capacity

Setting range of the trip values

- Thermal overload protection: Same setpoints as in 50/60Hz circuits
- Instantaneous short-circuit protection: The response threshold increases by maximum 40%.

The following wiring diagrams are recommended since the current must flow through all current paths in order to conform to the thermal tripping characteristic curve.

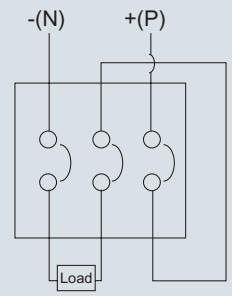

Recommended wiring method
for DC500V circuit

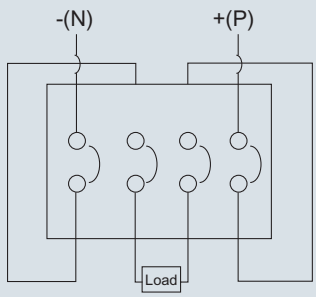

Recommended wiring method
for DC600V circuit

	Model	Trip unit	Applicable to DC circuits	Breaking capacity (kA)
Thermal magnetic	TD100N,TD160N	FTU FMU ATU	○	42
	TS100N,TS160N, TS250N TS400N, TS630N TS800N		○	50
	TD100H, TD160H		○	65
	TS100H, TS160H, TS250H TS400H, TS630H TS800H		○	85
	TD100L, TD160L TS100L, TS160L, TS250L TS400L, TS630L TS800L		○	100
Electronic	TS250, TS630, TS800	ETS, ETM	Impossible to use to DC circuits	

Application
Circuit breakers for 400Hz networks

When circuit breakers are used at high frequencies, the breakers in many cases require to be derated as the increased resistance of the copper sections resulting from the skin effect produced by eddy currents at 400Hz.

- Standard production breakers can be used with alternating currents with frequencies other than 50/60 Hz (the frequencies to which the rated performance of the device refer, with alternating current) as appropriate derating coefficients are applied.

Thermal magnetic trip units

Thermal trip

As can be seen from the data shown in below, the tripping threshold of the thermal element (In) decreases as the frequency increases because of the reduced conductivity of the materials and the increase of the associated thermal phenomena.
Rated current (A) at 400Hz= K1 × rated current (A) at 50/60Hz

Instantaneous trip

The magnetic threshold increases with the increase in frequency.
Instantaneous current (A) at 400Hz= K2 × Instantaneous current (A) at 50/60Hz

Thermal magnetic trip units

TD and TS series performance table at 400Hz

Rated current (A) in 400 Hz	Applied circuit breaker (MCCB)	Trip unit	Multiplier factors (K1, K2)	
			K1 (Thermal trip units)	K2 (Magnetic trip units)
16 0.8	TD100N, TD100H, TD100L TS100N, TS100H, TS100L TD160N, TD160H, TD160L TS160N, TS160H, TS160L	FTU FMU ATU		2
20 0.8				2
25 0.8				2
32			0.8	2
40			0.8	2
50			0.8	2
63			0.8	2
80 0.8				2
100			0.8 2	
125			0.8 2	
160	TS250N, TS250H, TS250L		0.8 2	
200 0.8				2
250 0.8	TS400N, TS400H, TS400L TS630N, TS630H, TS630L			2
300			0.8	2
400			0.8	2
500 0.8				2
630	TS800N, TS800H, TS800L		0.8 2	
700 0.8				2

Note) K1 × Multiplier factor of rated current (In)
K2-Multiplier factor of instantaneous current due to the induced magnetic fields
FTU-Fixed Thermal and magnetic trip unit
FMU × Adjustable thermal and fixed magnetic trip unit
ATU × Adjustable thermal and magnetic trip unit

Application
Circuit breakers for 400Hz networks

Electronic trip units

The use of electronics offers the advantage of greater operating stability when the frequency is varied. However, the devices are still subjected to frequency related temperature effects which may sometimes pose restrictions on their use. Column K1 of the table below gives the maximum permissible current to be used for the current setting (knob position).

Rated current (A) in 400 Hz	Applied circuit breaker (MCCB)	Trip unit	Multiplier factors (K1, K2)	
			K1 (Thermal trip units)	K2 (Magnetic trip units)
40	TS100N, TS100H, TS100L TS160N, TS160H, TS160L TS250N, TS250H, TS250L TS400N, TS400H, TS400L TS630N, TS630H, TS630L TS800N, TS800H, TS800L	ETS ETM	0.4 to 1	1
80			0.4 to 1	1
160			0.4 to 0.9	1
250			0.4 to 0.9	1
400			0.4 to 0.8	1
630			0.4 to 0.8	1
800			0.4 to 0.75	0.97

Note) ATU × Adjustable thermal and magnetic trip unit
K1 × Multiplier factor of rated current (In)
K2-Multiplier factor of instantaneous current due to the induced magnetic fields
ETS × Electronic trip unit (Standard)
ETM × Electronic trip unit (Multi-function)

Application
Protection of several kinds of loads

Application for protection of several kinds of loads

It requires to select proper circuit breakers according to the characteristics of loads when they are installed to protect several kinds of loads. It's needed to consider the maximum operating current and the capacity of loads in total so as to select the rated current of breakers.

Selection of circuit breaker protecting the several loads simultaneously

The kind of loads (I_M: motors, I_L: others)	Permissible current in cable or wire: I_W	The rated current of circuit breaker: I_b
In case of, $\Sigma I_M \leq \Sigma I_L$ 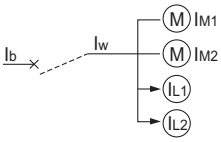	$I_W \geq \Sigma I_M + \Sigma I_L$	Choose the low value among two formulas: $I_b \geq 3\Sigma I_M + \Sigma I_L$. and $I_b \leq 2.5 I_W$ It's permitted to select the above value only if I_W (above 100A) isn't subject to the rated current of circuit breaker.
In case of, $\Sigma I_M > \Sigma I_L$, $\Sigma I_M \leq 50A$ 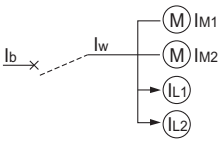	$I_W \geq 1.25\Sigma I_M + \Sigma I_L$	
In case of, $\Sigma I_M > \Sigma I_L$, $\Sigma I_M > 50A$ 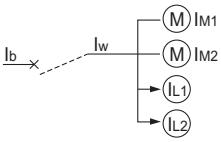	$I_W \geq 1.1\Sigma I_M + \Sigma I_L$	

The rated current of breakers as the main circuit of 3 phase inductive loads (AC 220V)

Capacity of loads In total (below kW)	The maximum operating current (below A)	Capacity of the highest motor (kW / A)															
		0.75	1.5	2.2	3.7	5.5	7.5	11	15	18.5	22	30	37	45	55	75	90
		4.8	8	11.1	17.4	26	34	48	65	79	93	125	160	190	230	310	360
3 15		20	32	32													
4.5 20		32	32	32	50												
6.3 30		40	40	40	50	63											
8.2 40		50	50	50	50	80	100										
12 50		63	63	63	63	80	100										
15.7 75		100	100	100	100	100	100	125	160								
19.5 90		100	100	100	100	100	100	125	160	200							
23.2 100		125	125	125	125	125	125	125	160	200	200						
30 125		160	160	160	160	160	160	160	160	200	250						
37.5 150		200	200	200	200	200	200	200	200	200	250	300					
45 175		200	200	200	200	200	200	200	200	200	250	300	400				
52.5 200		250	250	250	250	250	250	250	250	250	250	300	400	500			
63.7 250		300	300	300	300	300	300	300	300	300	300	300	400	500	500		
75 300		400	400	400	400	400	400	400	400	400	400	400	400	500	500		
86.2 350		400	400	400	400	400	400	400	400	400	400	400	400	500	500	630	
97.5 400		500	500	500	500	500	500	500	500	500	500	500	500	500	500	630	700
112.5 450		500	500	500	500	500	500	500	500	500	500	500	500	500	500	700	700
125 500		630	630	630	630	630	630	630	630	630	630	630	630	630	630	700	700
150 600		700	700	700	700	700	700	700	700	700	700	700	700	700	700	700	800
175 700		800	800	800	800	800	800	800	800	800	800	800	800	800	800	800	800

Application
Protection of several kinds of loads

The rated current of breakers as the main circuit of 3 phase inductive loads (AC 440V)

Capacity of loads In total (below kW)	The maximum operating current (below A)	Capacity of the highest motor (kW / A)																	
		0.75	1.5	2.2	3.7	5.5	7.5	11	15	18.5	22	30	37	45	55	75	90	110	132
		4.8	8	11.1	17.4	26	34	48	65	79	93	125	160	190	230	310	360	220	250
3 7.5		16	16	16															
4.5 10		16	16	16	32														
6.3	15	20	20	20	32	40													
8.2	20 32		32	32	32	40	50												
12 25		32	32	32	32	40	50												
15.7 38		50	50	50	50	50	50	63	80										
19.5 45		50	50	50	50	50	50	63	80	100									
23.2 50		63	63	63	63	63	63	63	80	100	125								
30 63		80	80	80	80	80	80	80	100	100	125								
37.5 75		100	100	100	100	100	100	100	100	100	125	160							
45 88		100	100	100	100	100	100	100	100	100	125	160	200						
52.5 100		125	125	125	125	125	125	125	125	125	125	160	200	250					
63.7 125		160	160	160	160	160	160	160	160	160	160	160	200	250	250				
75 150		200	200	200	200	200	200	200	200	200	200	200	200	250	250				
86.2 175		200	200	200	200	200	200	200	200	200	200	200	200	250	300	400			
97.5 200		250	250	250	250	250	250	250	250	250	250	250	250	250	300	400	400	500	
112.5 225		250	250	250	250	250	250	250	250	250	250	250	250	250	300	400	400	500	500
125 250		300	300	300	300	300	300	300	300	300	300	300	300	300	300	400	400	500	500
150 300		400	400	400	400	400	400	400	400	400	400	400	400	400	400	400	400	500	500
175 350		400	400	400	400	400	400	400	400	400	400	400	400	400	400	400	500	630	630
200 400		500	500	500	500	500	500	500	500	500	500	500	500	500	500	500	500	700	700
250 500		630	630	630	630	630	630	630	630	630	630	630	630	630	630	630	630	800	800
300 600		700	700	700	700	700	700	700	700	700	700	700	700	700	700	700	700	800	800
350 700		800	800	800	800	800	800	800	800	800	800	800	800	800	800	800	800	-	-
400 700		800	800	800	800	800	800	800	800	800	800	800	800	800	800	800	800	-	-

Notes) The above mentioned technical data is defined under the usage conditions as follows ;
1. The circuit breaker is tripped within 10seconds in 600% of the current of the fully operating loads.
2. The start-up input current is set within 1700% of the current of the fully operating loads.
3. The capacity of highest motor is also applied when several loads starts up simultaneously.

Protective coordination
Discrimination & Cascading

The primary purpose of a circuit protection system is to prevent damage to series connected equipment and to minimize the area and duration of power loss.
The first consideration is whether an air circuit breaker or molded case circuit breaker is the most suitable. The next is the type of system to be used.
The two major types are: Discrimination and cascading.

Discrimination

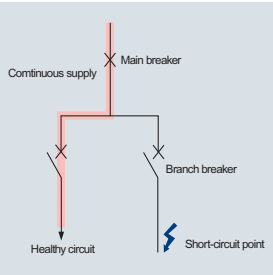

<Discrimination>

According to IEC60947-2, the discrimination can be defined as follows.

Total discrimination (total selectivity)
Over-current discrimination where, in the presence of two over-current protective devices in series, the protective device on the load side effects the protection without causing the other protective device to operate.

Partial discrimination (partial selectivity)
Over-current discrimination where, in the presence of two over-current protective devices in series, the protective device on the load side effects the protection up to a given level of over-current, without causing the other protective device to operate.

No discrimination
In case of a fault, main and branch circuit breakers open.

Cascading

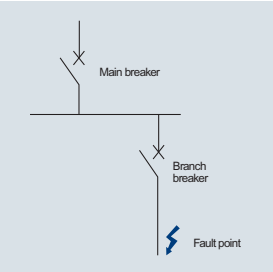

<Cascading>

This is an economical approach to the use of circuit breakers, whereby only the main (upstream) breaker has adequate interrupting capacity for the maximum available fault current.
The MCCBs downstream cannot handle this maximum fault current and rely on the opening of the upstream breaker for protection.
The advantage of the cascade back-up approach is that it facilitates the use of low cost, low fault level breakers downstream, thereby offering savings in both the cost and size of equipment.
As Susol TD & TS circuit breakers have a very considerable current limiting effect, they can be used to provide this ‘cascade back-up’ protection for downstream circuit breakers.

Protective coordination
Cascading, network 220/240V

Complementary technical information

Main: Susol TD/TS series **Branch: Metasol AB and Susol MCCB**

Branch breaker		Main breaker	TD100N	TD100H	TD100L	TD160N	TD160H	TD160L	TS100N	TS100H	TS100L
		Rated breaking capacity (kArms)	85 100		200	85	100	200	100	120	200
AB	ABS33c	30 50		50	65	50	50	65	65	65	85
	ABN53c	30 50		50	65	50	50	65	85	100	100
	ABS53c	35 65		65	85	65	65	85	100	120	120
	ABH53c	100 120						120			
	ABN63c	30 50		65	85	65	65	85	65	65	85
	ABS63c	35 65		85	100	85	85	100	85	100	100
	ABN103c	35 85		100	120	85	100	120	100	120	120
	ABS125c	85									
	ABH125c	100									
	ABN203c	65									
	ABS203c	85									
	ABH203c	100									
	ABN403c	50									
	ABS403c	75									
	ABH403c	85									
	ABL403c	125									
	ABN803c	50									
	ABS803c	85									
	ABL803c	125									
Susol TD & TS	TD100N	85 100			200		100	200	100	120	200
	TD100H	100 200						200		120	200
	TD160N	85 100						200			
	TD160H	100 200									
	TS100N	100 120									200
	TS100H	120									200
	TS160N	100									
	TS160H	120									
	TS250N	100									
	TS250H	120									
	TS400N	100									
	TS400H	120									
	TS630N	100									
	TS630H	120									
	TS800N	100									
	TS800H	120									
	TS1000N	55									
	TS1000H	75									
	TS1250N	55									
	TS1250H	75									

Protective coordination
Cascading, network 220/240V

Complementary technical information

Main: Susol TS series **Branch: Metasol AB and Susol MCCB**

Branch breaker		Main breaker	TS160N	TS160H	TS160L	TS250N	TS250H	TS250L	TS400N	TS400H	TS400L
		Rated breaking capacity (kArms)	100	120	200	100	120	200	100	120	200
AB	ABS33c	30 65		65	85	50	50	65			
	ABN53c	30 85		100	100	50	50	65			
	ABS53c	35 100		120	120	65	65	85			
	ABH53c	100 120						120			
	ABN63c	30 65		65	85	65	65	85			
	ABS63c	35 85		100	100	85	85	100			
	ABN103c	35 100		120	120	85	100	120			
	ABS125c	85 100					100	120	100	120	150
	ABH125c	100 120						150	100	120	150
	ABN203c	65 85					85	100	85	85	100
	ABS203c	85 100					100	120	100	120	150
	ABH203c	100 120						150	100	120	150
	ABN403c	50 85								100	100
	ABS403c	75 100								120	120
	ABH403c	85 100								120	150
	ABL403c	125									200
	ABN803c	50									
	ABS803c	85									
	ABL803c	125									
Susol TD & TS	TD100N	85 100		120	200	100	120	200	100	120	200
	TD100H	100 120			200		120	200		120	200
	TD160N	85 100		120	200	100	120	200	100	120	200
	TD160H	100 120			200		120	200		120	200
	TS100N	100 120			200		120	200		120	200
	TS100H	120 200						200			200
	TS160N	100 120			200		120	200		120	200
	TS160H	120 200						200			200
	TS250N	100 120						200		120	200
	TS250H	120 200									200
	TS400N	100 120									200
	TS400H	120									200
	TS630N	100									
	TS630H	120									
	TS800N	100									
	TS800H	120									
	TS1000N	55									
	TS1000H	75									
	TS1250N	55									
	TS1250H	75									

Protective coordination
Cascading, network 220/240V

Complementary technical information

Main: Susol TS series **Branch: Metasol AB and Susol MCCB**

Branch breaker		Main breaker	TS630N	TS630H	TS630L	TS800N	TS800H	TS800L
		Rated breaking capacity (kArms)	100 120		200	100 120		200
AB	ABS33c	30						
	ABN53c	30						
	ABS53c	35						
	ABH53c	100						
	ABN63c	30						
	ABS63c	35						
	ABN103c	35						
	ABS125c	85 100		120	150			
	ABH125c	100 100		120	150			
	ABN203c	65 85		85	100			
	ABS203c	85 100		120	150			
	ABH203c	100 100		120	150			
	ABN403c	50 85		100	100	85	100	100
	ABS403c	75 100		120	120	100	120	120
	ABH403c	85 100		120	150	100	120	150
	ABL403c	125 200						200
	ABN803c	50 100					120	120
	ABS803c	85 120						150
	ABL803c	125						200
Susol TD & TS	TD100N	85 100		120	200	100	120	200
	TD100H	100 120			200		120	200
	TD160N	85 100		120	200	100	120	200
	TD160H	100 120			200		120	200
	TS100N	100 120			200		120	200
	TS100H	120 200						200
	TS160N	100 120			200		120	200
	TS160H	120 200						200
	TS250N	100 120			200		120	200
	TS250H	120 200						200
	TS400N	100 120			200		120	200
	TS400H	120 200						200
	TS630N	100 120			200		120	200
	TS630H	120 200						200
	TS800N	100 120						200
	TS800H	120						200
	TS1000N	55						
	TS1000H	75						
	TS1250N	55						
	TS1250H	75						

Protective coordination
Cascading, network 220/240V

Complementary technical information

Main: Susol TS series **Branch: Metasol AB and Susol MCCB**

Branch breaker		Main breaker	TS1000N	TS1000H	TS1000L	TS1250N	TS1250H	TS1600N	TS1600H
		Rated breaking capacity (kArms)	55 75		200	55	75	55	75
AB	ABS33c	30							
	ABN53c	30							
	ABS53c	35							
	ABH53c	100							
	ABN63c	30							
	ABS63c	35							
	ABN103c	35							
	ABS125c	85							
	ABH125c	100							
	ABN203c	65							
	ABS203c	85							
	ABH203c	100							
	ABN403c	50 55		75	200	55	75	55	75
	ABS403c	75 200							
	ABH403c	85 200							
	ABL403c	125 200							
	ABN803c	50 55		75	200	55	75	55	75
	ABS803c	85 200							
	ABL803c	125 200							
Susol TD & TS	TD100N	85 200							
	TD100H	100 200							
	TD160N	85 200							
	TD160H	100 200							
	TS100N	100 200							
	TS100H	120 200							
	TS160N	100 200							
	TS160H	120 200							
	TS250N	100 200							
	TS250H	120 200							
	TS400N	100 200							
	TS400H	120 200							
	TS630N	100 200							
	TS630H	120 200							
	TS800N	100 200							
	TS800H	120 200							
	TS1000N	55 200					75		75
	TS1000H	75 200							
	TS1250N	55 200					75		75
	TS1250H	75 200							

Protective coordination
Cascading, network 380/415V

Complementary technical information

Main: Susol TD/TS series **Branch: Metasol AB and Susol MCCB**

Branch breaker		Main breaker	TD100N	TD100H	TD100L	TD160N	TD160H	TD160L	TS100N	TS100H	TS100L
		Rated breaking capacity (kArms)	50 85		150	50	85	150	50	85	150
AB	ABS33c	14 25		30	30	25	30	30	30	40	40
	ABN53c	14 35		50	50	35	50	50	35	65	65
	ABS53c	18 50		65	65	50	65	65	50	70	70
	ABH53c	50									
	ABN63c	14 25		30	30	25	30	30	30	40	40
	ABS63c	18 35		50	50	35	50	50	35	65	65
	ABN103c	18 50		65	65	50	65	65	50	70	70
	ABS125c	37 50		65	65	50	65	65	50	70	70
	ABH125c	50									
	ABN203c	26									
	ABS203c	37									
	ABH203c	50									
	ABN403c	37									
	ABS403c	50									
	ABH403c	65									
	ABL403c	85									
	ABN803c	37									
	ABS803c	65									
	ABL803b	85									
Susol TD & TS	TD100N	50 85			150		85	150		85	150
	TD100H	85 150						150			150
	TD160N	50 85						150			
	TD160H	85 150									
	TS100N	50 85									150
	TS100H	85									150
	TS160N	50									
	TS160H	85									
	TS250N	50									
	TS250H	85									
	TS400N	65									
	TS400H	85									
	TS630N	65									
	TS630H	85									
	TS800N	65									
	TS800H	85									
	TS1000N	50									
	TS1000H	70									
	TS1250N	50									
	TS1250H	70									

Protective coordination
Cascading, network 380/415V

Complementary technical information

Main: Susol TS series **Branch: Metasol AB and Susol MCCB**

Branch breaker		Main breaker	TS160N	TS160H	TS160L	TS250N	TS250H	TS250L	TS400N	TS400H	TS400L
		Rated breaking capacity (kArms)	50 85		150	50	85	150	65	85	150
AB	ABS33c	14 30		40	40	30	40	40			
	ABN53c	14 35		65	65	35	65	65			
	ABS53c	18 50		70	70	50	70	70			
	ABH53c	50 65						70			
	ABN63c	14 30		40	40	30	40	40			
	ABS63c	18 35		65	65	35	65	65			
	ABN103c	18 50		70	70	50	70	70			
	ABS125c	37	50	70	70	40 65		70 50		70	85
	ABH125c	50 70			70		70	85		85	100
	ABN203c	26				35 50		50 40		50	70
	ABS203c	37				40 65		70 50		70	85
	ABH203c	50 70						85		85	100
	ABN403c	37 50								70	85
	ABS403c	50 85									100
	ABH403c	65 85									120
	ABL403c	85									150
	ABN803c	37									
	ABS803c	65									
	ABL803b	85									
Susol TD & TS	TD100N	50 85			150		85	150	65	85	150
	TD100H	85 150						150			150
	TD160N	50 85			150		85	150	65	85	150
	TD160H	85 150						150			150
	TS100N	50 85			150		85	150	65	85	150
	TS100H	85 150						150			150
	TS160N	50 85			150		85	150	65	85	150
	TS160H	85 150						150			150
	TS250N	50 85						150	65	85	150
	TS250H	85 150									150
	TS400N	65 85									150
	TS400H	85									150
	TS630N	65									
	TS630H	85									
	TS800N	65									
	TS800H	85									
	TS1000N	50									
	TS1000H	70									
	TS1250N	50									
	TS1250H	70									

Protective coordination
Cascading, network 380/415V

Complementary technical information

Main: Susol TS series **Branch: Metasol AB and Susol MCCB**

Branch breaker		Main breaker	TS630N	TS630H	TS630L	TS800N	TS800H	TS800L
		Rated breaking capacity (kArms)	65 85		150	65	100	150
AB	ABS33c	14						
	ABN53c	14						
	ABS53c	18						
	ABH53c	50						
	ABN63c	14						
	ABS63c	18						
	ABN103c	18						
	ABS125c	37 50		70	85			
	ABH125c	50 85			100			
	ABN203c	26 40		50	70			
	ABS203c	37 50		70	85			
	ABH203c	50 85			100			
	ABN403c	37 50		70	85	50	70	85
	ABS403c	50 85			100		85	100
	ABH403c	65 85			120	65	100	120
	ABL403c	85 150					100	150
	ABN803c	37 65					85	100
	ABS803c	65 65					100	120
	ABL803b	85 100						150
Susol TD & TS	TD100N	50 65		85	150	65	100	150
	TD100H	85 150						150
	TD160N	50 65		85	150	65	100	150
	TD160H	85 150						150
	TS100N	50 65		85	150	65	100	150
	TS100H	85 150						150
	TS160N	50 65		85	150	65	100	150
	TS160H	85 150						150
	TS250N	50 65		85	150	65	100	150
	TS250H	85 150						150
	TS400N	65 85			150		100	150
	TS400H	85 150						150
	TS630N	65 85			150		100	150
	TS630H	85 150						150
	TS800N	65 100						150
	TS800H	85						
	TS1000N	50						
	TS1000H	70						
	TS1250N	50						
	TS1250H	70						

Protective coordination
Cascading, network 380/415V

Complementary technical information

Main: Susol TS series **Branch: Metasol AB and Susol MCCB**

Branch breaker		Main breaker	TS1000N	TS1000H	TS1000L	TS1250N	TS1250H	TS1600N	TS1600H
		Rated breaking capacity (kArms)	50 70		150	50	70	50	70
AB	ABS33c	14							
	ABN53c	14							
	ABS53c	18							
	ABH53c	50							
	ABN63c	14							
	ABS63c	18							
	ABN103c	18							
	ABS125c	37							
	ABH125c	50							
	ABN203c	26							
	ABS203c	37							
	ABH203c	50							
	ABN403c	37 50		70	150	50	70	50	70
	ABS403c	50 70			150		70		70
	ABH403c	65 70			150		70		70
	ABL403c	85 150							
	ABN803c	37 50		70	150	50	70	50	70
	ABS803c	65 70			150		70		70
	ABL803b	85 150							
Susol TD & TS	TD100N	50 70			150		70		70
	TD100H	85 150							
	TD160N	50 70			150		70		70
	TD160H	85 150							
	TS100N	50 70			150		70		70
	TS100H	85 150							
	TS160N	50 70			150		70		70
	TS160H	85 150							
	TS250N	50 70			150		70		70
	TS250H	85 150							
	TS400N	65 70			150		70		70
	TS400H	85 150							
	TS630N	65 70			150		70		70
	TS630H	85 150							
	TS800N	65 70			150		70		70
	TS800H	85 150							
	TS1000N	50 70			150		70		70
	TS1000H	70 150							
	TS1250N	50 70			150		70		70
	TS1250H	70 150							

Protective coordination
Motor protection cascading, network 220/240V

Main: Susol TD/TS series

Branch: Susol MCCB

Branch breaker		Main breaker	TD100N	TD100H	TD100L	TD160N	TD160H	TD160L	TS100N	TS100H	TS100L
		Rated breaking capacity (kArms)	85 100		200	85	100	200	100	120	200
Susol TD & TS	TD100N	85 100			200		100	200	100	120	200
	TD100H	100 200						200		120	200
	TD160N	85 100						200			
	TD160H	100 200									
	TS100N	100 120									200
	TS100H	120									200
	TS160N	100									
	TS160H	120									

Branch breaker		Main breaker	TS160N	TS160H	TS160L	TS250N	TS250H	TS250L	TS400N	TS400H	TS400L
		Rated breaking capacity (kArms)	100 120		200	100	120	200	100	120	200
Susol TD & TS	TD100N	85 100		120	200	100	120	200	100	120	200
	TD100H	100 120			200		120	200		120	200
	TD160N	85 100		120	200	100	120	200	100	120	200
	TD160H	100 120			200		120	200		120	200
	TS100N	100 120			200		120	200		120	200
	TS100H	120 200						200			200
	TS160N	100 120			200		120	200		120	200
	TS160H	120 200						200			200
	TS250N	100 120						200		120	200
	TS250H	120 200									200

Branch breaker		Main breaker	TS630N	TS630H	TS630L	TS800N	TS800H	TS800L
		Rated breaking capacity (kArms)	100 120		200	100 120		200
Susol TD & TS	TD100N	85 100		120	200	100	120	200
	TD100H	100 120			200		120	200
	TD160N	85 100		120	200	100	120	200
	TD160H	100 120			200		120	200
	TS100N	100 120			200		120	200
	TS100H	120 200						200
	TS160N	100 120			200		120	200
	TS160H	120 200						200
	TS250N	100 120			200		120	200
	TS250H	120 200						200
	TS400N	100 120			200		120	200
	TS400H	120 200						200
	TS630N	100 120			200		120	200
	TS630H	120 200						200
	TS800N	100 120						200
	TS800H	120						200

Main: Susol TS series
Branch: Susol MCCB

Branch breaker		Main breaker	TS1000N	TS1000H	TS1000L	TS1250N	TS1250H	TS1600N	TS1600H
		Rated breaking capacity (kArms)	55 75		200	55	75	55	75
Susol TD & TS	TD100N	85 200							
	TD100H	100 200							
	TD160N	85 200							
	TD160H	100 200							
	TS100N	100 200							
	TS100H	120 200							
	TS160N	100 200							
	TS160H	120 200							
	TS250N	100 200							
	TS250H	120 200							
	TS400N	100 200							
	TS400H	120 200							
	TS630N	100 200							
	TS630H	120 200							
	TS800N	100 200							
	TS800H	120 200							
	TS1000N	55 200					75		75
	TS1000H	75 200							
	TS1250N	55 200					75		75
	TS1250H	75 200							

Protective coordination
Motor protection cascading, network 380/415V

Main: Susol TD/TS series

Branch: Susol MCCB

Branch breaker		Main breaker	TD100N	TD100H	TD100L	TD160N	TD160H	TD160L	TS100N	TS100H	TS100L
		Rated breaking capacity (kArms)	85 100		200	85	100	200	100	120	200
Susol TD & TS	TD100N	50 85			150		85	150		85	150
	TD100H	85 150						150			150
	TD160N	50 85						150			
	TD160H	85 150									
	TS100N	50 85									150
	TS100H	85									150
	TS160N	50									
	TS160H	85									

Branch breaker		Main breaker	TS160N	TS160H	TS160L	TS250N	TS250H	TS250L	TS400N	TS400H	TS400L
		Rated breaking capacity (kArms)	100 120		200	100	120	200	100	120	200
Susol TD & TS	TD100N	50 85			150		85	150	65	85	150
	TD100H	85 150						150			150
	TD160N	50 85			150		85	150	65	85	150
	TD160H	85 150						150			150
	TS100N	50 85			150		85	150	65	85	150
	TS100H	85 150						150			150
	TS160N	50 85			150		85	150	65	85	150
	TS160H	85 150						150			150
	TS250N	50 85						150	65	85	150
	TS250H	85 150									150

Branch breaker		Main breaker	TS630N	TS630H	TS630L	TS800N	TS800H	TS800L
		Rated breaking capacity (kArms)	100 120		200	100 120		200
Susol TD & TS	TD100N	50 65		85	150	65	100	150
	TD100H	85 150						150
	TD160N	50 65		85	150	65	100	150
	TD160H	85 150						150
	TS100N	50 65		85	150	65	100	150
	TS100H	85 150						150
	TS160N	50 65		85	150	65	100	150
	TS160H	85 150						150
	TS250N	50 65		85	150	65	100	150
	TS250H	85 150						150
	TS400N	65 85			150		100	150
	TS400H	85 150						150
	TS630N	65 85			150		100	150
	TS630H	85 150						150
	TS800N	65 100						150
	TS800H	85						

Main: Susol TS series
Branch: Susol MCCB

Branch breaker		Main breaker	TS1000N	TS1000H	TS1000L	TS1250N	TS1250H	TS1600N	TS1600H
		Rated breaking capacity (kArms)	55 75		200	55	75	55	75
Susol TD & TS	TD100N	50 70			150		70		70
	TD100H	85 150							
	TD160N	50 70			150		70		70
	TD160H	85 150							
	TS100N	50 70			150		70		70
	TS100H	85 150							
	TS160N	50 70			150		70		70
	TS160H	85 150							
	TS250N	50 70			150		70		70
	TS250H	85 150							
	TS400N	65 70			150		70		70
	TS400H	85 150							
	TS630N	65 70			150		70		70
	TS630H	85 150							
	TS800N	65 70			150		70		70
	TS800H	85 150							
	TS1000N	50 70			150		70		70
	TS1000H	70 150							
	TS1250N	50 70			150		70		70
	TS1250H	70 150							

Protective coordination
Protection discrimination table, Discrimination

Complementary technical information

Main: Susol MCCB 100~800AF **Branch: AB type MCCB**

Branch breaker		Main breaker Rating (A)		TD100N/H/L Trip units-Thermal magnetic									TD160N/H/L		
				16	20	25	32	40	50	63	80	100	100	125	160
AB100	N	Trip units-Thermal magnetic	~10				0.4	0.5	0.5	0.5	0.63	0.8	T	T	T
			15					0.5	0.5	0.5	0.63	0.8	T	T	T
			20					0.5	0.5	0.5	0.63	0.8	9	9	9
			30							0.5	0.63	0.8	9	9	9
			40								0.63	0.8	9	9	9
			50								0.63	0.8	8	8	8
			60									0.8	8	8	8
			75											8	8
			100												8
AB125	S		15						0.5	0.5	0.63	0.8	10	10	10
			20						0.5	0.5	0.63	0.8	9	10	10
			30							0.5	0.63	0.8	9	9	9
			40								0.63	0.8	9	9	9
			50								0.63	0.8	8	8	8
			60									0.8	8	8	8
			75										8	8	8
			100											8	8
			125												8
	H		15					0.5	0.5	0.5	0.63	0.8	10	10	10
			20						0.5	0.5	0.63	0.8	9	10	10
			30						0.5	0.5	0.63	0.8	9	9	9
			40							0.5	0.63	0.8	9	9	9
			50								0.63	0.8	8	8	8
			60								0.63	0.8	8	8	8
			75									0.8	8	8	8
			100											8	8
			125												
AB203	N	Trip units-Thermal magnetic	100												
			125												
			150												
			175												
			200												
			225												
			250												
	S		100												
			125												
			150												
			175												
			200												
			225												
			250												
	H		100												
			125												
			150												
			175												
			200												
			225												
			250												

	TS100N/H/L					TS160N/H/L			TS250N/H/L				TS400N/H/L		TS630N/H/L		TS800N/H/L
	Trip units-Thermal magnetic/Electronic																
	40	50	63	80	100	100	125	160	125	160	200	250	300	400	500	630	800
	T	T	T	T	T	T	T	T	T	T	T	T	T	T	T	T	T
	T	T	T	T	T	T	T	T	T	T	T	T	T	T	T	T	T
	T	T	T	T	T	T	T	T	T	T	T	T	T	T	T	T	T
			T	T	T	T	T	T	T	T	T	T	T	T	T	T	T
				T	T	T	T	T	T	T	T	T	T	T	T	T	T
				T	T	T	T	T	T	T	T	T	T	T	T	T	T
					T	T	T	T	T	T	T	T	T	T	T	T	T
							T	T	T	T	T	T	T	T	T	T	T
								T	T	T	T	T	T	T	T	T	T
	10	10	10	11	11	11	12.5	12.5	15	15	18	18	T	T	T	T	T
	10	10	10	10	11	11	11	12.5	15	15	15	18	T	T	T	T	T
			8	10	11	11	11	11	15	15	15	18	20	T	T	T	T
				8	11	11	11	11	15	15	15	15	20	T	T	T	T
				8	11	11	11	11	15	15	15	15	20	20	T	T	T
					8	8	8	11	12.5	12.5	12.5	12.5	20	20	20	T	T
							8	11	12.5	12.5	12.5	12.5	20	20	20	T	T
								11	12.5	12.5	12.5	12.5	20	20	20	T	T
								11	12.5	12.5	12.5	12.5	20	20	20	T	T
	10	10	10	11	11	11	12.5	12.5	15	15	18	18	25	25	25	25	T
	10	10	10	10	11	11	11	12.5	15	15	15	18	25	25	25	25	T
			8	10	11	11	11	11	15	15	15	18	20	25	25	25	T
				8	11	11	11	11	15	15	15	15	20	25	25	25	T
				8	11	11	11	11	15	15	15	15	20	20	25	25	T
					8	8	8	11	12.5	12.5	12.5	12.5	20	20	20	25	T
							8	11	12.5	12.5	12.5	12.5	20	20	20	25	T
								11	12.5	12.5	12.5	12.5	20	20	20	25	T
								11	12.5	12.5	12.5	12.5	20	20	20	25	T
							8	8			8	8	T	T	T	T	T
								8				8	T	T	T	T	T
													15	15	15	15	T
													12.5	12.5	15	15	T
													11	12.5	12.5	12.5	T
													11	11	12.5	12.5	T
													11	11	12.5	12.5	T
							8	8			8	8	18	18	18	18	T
								8				8	18	18	18	18	T
													15	15	15	15	T
													12.5	12.5	15	15	T
													11	12.5	12.5	12.5	T
													11	11	12.5	12.5	T
													11	11	12.5	12.5	T
							8	8			8	8	18	18	18	18	28
								8				8	18	18	18	18	28
													15	15	15	15	28
													12.5	12.5	15	15	28
													11	12.5	12.5	12.5	28
													11	11	12.5	12.5	28
													11	11	12.5	12.5	28

Protective coordination
Protection discrimination table, Discrimination

Complementary technical information

Main: Susol TD 100/160 **Branch: Susol TD 100/160**

Branch breaker		Main breaker Rating (A)		TD100N/H/L Trip units-Thermal magnetic/Electronic									TD160N/H/L		
				16	20	25	32	40	50	63	80	100	100	125	160
TD100	N	Trip units-Thermal magnetic	16				0.4	0.5	0.5	0.5	0.63	0.8	2	2	2
			20						0.5	0.5	0.63	0.8	2	2	2
			25						0.5	0.5	0.63	0.8	2	2	2
			32							0.5	0.63	0.8	2	2	2
			40								0.63	0.8	2	2	2
			50								0.63	0.8	2	2	2
			63									0.8	2	2	2
			80											1.25	2
			100												1.6
	H		16					0.5	0.5	0.5	0.63	0.8	2	2	2
			20						0.5	0.5	0.63	0.8	2	2	2
			25						0.5	0.5	0.63	0.8	2	2	2
			32							0.5	0.63	0.8	2	2	2
			40								0.63	0.8	2	2	2
			50								0.63	0.8	2	2	2
			63									0.8	2	2	2
			80											1.25	2
			100											1	1.6
	L		16					0.5	0.5	0.5	0.63	0.8	2	2	2
			20						0.5	0.5	0.63	0.8	2	2	2
			25						0.5	0.5	0.63	0.8	2	2	2
			32							0.5	0.63	0.8	2	2	2
			40								0.63	0.8	2	2	2
			50								0.63	0.8	2	2	2
			63									0.8	2	2	2
			80											1.25	2
			100											1	1.6
TD160	N		100											1	1.6
			125												1.25
			160												
	H		100												1.6
			125												1.25
			160												
	L		100												1.6
			125												1.25
			160												

Protective coordination
Protection discrimination table, Discrimination

Complementary technical information

Main: Susol TS 100/160/250(Electronic) **Branch: Susol TD 100/160**

Branch breaker		Main breaker Rating (A)		TS100N/H/L					TS160N/H/L			TS250N/H/L			
				Trip units-Thermal magnetic/Electronic											
				40	50	63	80	100	100	125	160	125	160	200	250
TD100	N	Trip units-Thermal magnetic	16	0.5	0.5	0.5	0.63	0.8	2	2	2	2	36	36	36
			20	0.5	0.5	0.5	0.63	0.8	2	2	2	2	36	36	36
			25	0.5	0.5	0.5	0.63	0.8	2	2	2	2	36	36	36
			32			0.5	0.63	0.8	2	2	2	2	36	36	36
			40				0.63	0.8	2	2	2	2	36	36	36
			50				0.63	0.8	2	2	2	2	36	36	36
			63					0.8	2	2	2	2	36	36	36
			80					0.8	1	1.25	2	1.25	36	36	36
			100							1	1.6	1	36	36	36
	H		16	0.5	0.5	0.5	0.63	0.8	2	2	2	2	36	36	36
			20		0.5	0.5	0.63	0.8	2	2	2	2	36	36	36
			25		0.5	0.5	0.63	0.8	2	2	2	2	36	36	36
			32			0.5	0.63	0.8	2	2	2	2	36	36	36
			40				0.63	0.8	2	2	2	2	36	36	36
			50				0.63	0.8	2	2	2	2	36	36	36
			63					0.8	2	2	2	2	36	36	36
			80					0.8	1	1.25	2	1.25	36	36	36
			100							1	1.6	1	36	36	36
	L		16	0.5	0.5	0.5	0.63	0.8	2	2	2	2	36	36	36
			20		0.5	0.5	0.63	0.8	2	2	2	2	36	36	36
			25		0.5	0.5	0.63	0.8	2	2	2	2	36	36	36
			32			0.5	0.63	0.8	2	2	2	2	36	36	36
			40				0.63	0.8	2	2	2	2	36	36	36
			50				0.63	0.8	2	2	2	2	36	36	36
			63					0.8	2	2	2	2	36	36	36
			80					0.8	1	1.25	2	1.25	36	36	36
			100							1	1.6	1	36	36	36
TD160	N		100							1	1.6	1	2.6	4	5
			125								1.25		1.25	4	5
			160												5
	H		100							1	1.6	1	2.6	4	5
			125								1.25		1.25	4	5
			160												5
	L		100							1	1.6	1	2.6	4	5
			125								1.25		1.25	4	5
			160												5

Protective coordination
Protection discrimination table, Discrimination

Complementary technical information

Main: Susol TS 400/630/800(Electronic) **Branch: Susol TS 100/160**

Branch breaker		Main breaker Rating (A)		TS400N/H/L		TS630N/H/L		TS800N/H/L
				Trip units-Thermal magnetic/Electronic				
				300	400	500	630	800
TD100	N	Trip units-Thermal magnetic	16	T	T	T	T	T
			20	T	T	T	T	T
			25	T	T	T	T	T
			32	T	T	T	T	T
			40	T	T	T	T	T
			50	T	T	T	T	T
			63	T	T	T	T	T
			80	T	T	T	T	T
			100	T	T	T	T	T
	H		16	T	T	T	T	T
			20	T	T	T	T	T
			25	T	T	T	T	T
			32	T	T	T	T	T
			40	T	T	T	T	T
			50	T	T	T	T	T
			63	T	T	T	T	T
			80	T	T	T	T	T
			100	T	T	T	T	T
	L		16	T	T	T	T	T
			20	T	T	T	T	T
			25	T	T	T	T	T
			32	T	T	T	T	T
			40	T	T	T	T	T
			50	T	T	T	T	T
			63	T	T	T	T	T
			80	T	T	T	T	T
			100	T	T	T	T	T
TD160	N		100	T	T	T	T	T
			125	T	T	T	T	T
			160	T	T	T	T	T
	H		100	T	T	T	T	T
			125	T	T	T	T	T
			160	T	T	T	T	T
	L		100	T	T	T	T	T
			125	T	T	T	T	T
			160	T	T	T	T	T

Protective coordination
Protection discrimination table, Discrimination

Complementary technical information

Main: Susol 1000/1250/1600 **Branch: Susol TS 100/160**

Branch breaker		Main breaker Rating (A)		TS1000L		TS1000N/H		TS1250N/H	TS1600N/H
				Trip units-Electronic(Instant OFF)					
				800	1000	800	1000	1250	1600
TD100	N	Trip units-Thermal magnetic	16	T	T	T	T	T	T
			20	T	T	T	T	T	T
			25	T	T	T	T	T	T
			32	T	T	T	T	T	T
			40	T	T	T	T	T	T
			50	T	T	T	T	T	T
			63	T	T	T	T	T	T
			80	T	T	T	T	T	T
			100	T	T	T	T	T	T
	H		16	T	T	T	T	T	T
			20	T	T	T	T	T	T
			25	T	T	T	T	T	T
			32	T	T	T	T	T	T
			40	T	T	T	T	T	T
			50	T	T	T	T	T	T
			63	T	T	T	T	T	T
			80	T	T	T	T	T	T
			100	T	T	T	T	T	T
	L		16	T	T	T	T	T	T
			20	T	T	T	T	T	T
			25	T	T	T	T	T	T
			32	T	T	T	T	T	T
			40	T	T	T	T	T	T
			50	T	T	T	T	T	T
			63	T	T	T	T	T	T
			80	T	T	T	T	T	T
			100	T	T	T	T	T	T
TD160	N		100	T	T	T	T	T	T
			125	T	T	T	T	T	T
			160	T	T	T	T	T	T
	H		100	T	T	T	T	T	T
			125	T	T	T	T	T	T
			160	T	T	T	T	T	T
	L		100	T	T	T	T	T	T
			125	T	T	T	T	T	T
			160	T	T	T	T	T	T

Protective coordination
Protection discrimination table, Discrimination

Complementary technical information

Main: Susol TS 100/160/250(Electronic) **Branch: Susol TS 100/160/250**

Branch breaker		Main breaker Rating (A)		TS100N/H/L					TS160N/H/L			TS250N/H/L			
				Trip units-Thermal magnetic/Electronic											
				40	50	63	80	100	100	125	160	125	160	200	250
TS100	N	Trip units-Thermal magnetic	40				0.63	0.8	2	2	2	2	2.6	4	5
			50				0.63	0.8	2	2	2	2	2.6	4	5
			63					0.8	2	2	2	2	2.6	4	5
			80							1.25	2	2	2.6	4	5
			100							1	1.6	1	2.6	4	5
	H		40				0.63	0.8	2	2	2	2	2.6	4	5
			50				0.63	0.8	2	2	2	2	2.6	4	5
			63					0.8	2	2	2	2	2.6	4	5
			80							1.25	2	2	2.6	4	5
			100							1	1.6	1	2.6	4	5
	L		40				0.63	0.8	2	2	2	2	2.6	4	5
			50				0.63	0.8	2	2	2	2	2.6	4	5
			63					0.8	2	2	2	2	2.6	4	5
			80							1.25	2	2	2.6	4	5
			100							1	1.6	1	2.6	4	5
TS160	N		100								1.6	1	2.6	4	5
			125								1.25		1.25	4	5
			160												5
	H		100								1.6	1	2.6	4	5
			125								1.25		1.25	4	5
			160												5
	L		100								1.6	1	2.6	4	5
			125								1.25		1.25	4	5
			160												5
TS250	N		125											1.25	2.5
			160												2.5
			200												
			250												
	H		125											1.25	2.5
			160												2.5
			200												
			250												
	L		125											1.25	2.5
			160												2.5
			200												
			250												

Protective coordination
Protection discrimination table, Discrimination

Complementary technical information

Main: Susol TS 400/630/800(Electronic) **Branch: Susol TS 100/160/250**

Branch breaker		Main breaker Rating (A)		TS400N/H/L		TS630N/H/L		TS800N/H/L
				Trip units-Thermal magnetic/Electronic				
				300	400	500	630	800
TS100	N	Trip units-Thermal magnetic	40	T	T	T	T	T
			50	T	T	T	T	T
			63	T	T	T	T	T
			80	T	T	T	T	T
			100	T	T	T	T	T
	H		40	T	T	T	T	T
			50	T	T	T	T	T
			63	T	T	T	T	T
			80	T	T	T	T	T
			100	T	T	T	T	T
	L		40	T	T	T	T	T
			50	T	T	T	T	T
			63	T	T	T	T	T
			80	T	T	T	T	T
			100	T	T	T	T	T
TS160	N		100	T	T	T	T	T
			125	T	T	T	T	T
			160	T	T	T	T	T
	H		100	T	T	T	T	T
			125	T	T	T	T	T
			160	T	T	T	T	T
	L		100	T	T	T	T	T
			125	T	T	T	T	T
			160		T	T	T	T
TS250	N		125	5	5	T	T	T
			160		5	T	T	T
			200			T	T	T
			250				T	T
	H		125	5	5	T	T	T
			160		5	T	T	T
			200			T	T	T
			250				T	T
	L		125	5	5	T	T	T
			160		5	T	T	T
			200			T	T	T
			250				T	T

Protective coordination
Protection discrimination table, Discrimination

Complementary technical information

Main: TS1000/1250/1600 **Branch: TS100/160/250**

Branch breaker		Main breaker Rating (A)		TS1000L		TS1000N/H		TS1250N/H	TS1600N/H
				Trip units-Electronic(Instant OFF)					
				800	1000	800	1000	1250	1600
TS100	N	Trip units-Thermal magnetic	40	T	T	T	T	T	T
			50	T	T	T	T	T	T
			63	T	T	T	T	T	T
			80	T	T	T	T	T	T
			100	T	T	T	T	T	T
	H		40	T	T	T	T	T	T
			50	T	T	T	T	T	T
			63	T	T	T	T	T	T
			80	T	T	T	T	T	T
			100	T	T	T	T	T	T
	L		40	T	T	T	T	T	T
			50	T	T	T	T	T	T
			63	T	T	T	T	T	T
			80	T	T	T	T	T	T
			100	T	T	T	T	T	T
TS160	N		100	T	T	T	T	T	T
			125	T	T	T	T	T	T
			160	T	T	T	T	T	T
	H		100	T	T	T	T	T	T
			125	T	T	T	T	T	T
			160	T	T	T	T	T	T
	L		100	T	T	T	T	T	T
			125	T	T	T	T	T	T
			160	T	T	T	T	T	T
TS250	N		125	T	T	T	T	T	T
			160	T	T	T	T	T	T
			200	T	T	T	T	T	T
			250	T	T	T	T	T	T
	H		125	T	T	T	T	T	T
			160	T	T	T	T	T	T
			200	T	T	T	T	T	T
			250	T	T	T	T	T	T
	L		125	T	T	T	T	T	T
			160	T	T	T	T	T	T
			200	T	T	T	T	T	T
			250	T	T	T	T	T	T

Protective coordination
Protection discrimination table, Discrimination

Complementary technical information

Main: Susol TS 400/630/800(Electronic) **Branch: Susol TS 400/630/800**

Branch breaker		Main breaker Rating (A)		TS400N/H/L		TS630N/H/L		TS800N/H/L
				Trip units-Thermal magnetic/Electronic				
				300	400	500	630	800
TS400	N	Trip units-Thermal magnetic	300			8	8	T
			400				8	10
	H		300			8	8	T
			400				8	10
	L		300			8	8	T
			400				8	10
TS630	N		500				8	10
			630					10
	H		500				8	10
			630					10
	L		500				8	10
			630					10
TS800	N		800					
	H		800					
	L		800					

Complementary technical information

Main: Susol TS 1000/1250/1600 **Branch: Susol TS 400/630/800/1000/630/800(Electronic)**

Branch breaker		Main breaker Rating (A)		TS1000L		TS1000N/H		TS1250N/H	TS1600N/H
				Trip units-Electronic(Instant OFF)					
				800 1000		800	1000	1250	1600
TS400	N	Trip units-Thermal magnetic (TM)	300	18 18		T	T	T	T
			400	18 18		T	T	T	T
	H		300	18 18		T	T	T	T
			400	18 18		T	T	T	T
	L		300	30 30		T	T	T	T
			400	30 30		T	T	T	T
TS630	N		500	12 12		T	T	T	T
			630		12 T			T	T
	H		500	12 12		T	T	T	T
			630		12		T	T	T
	L		500	12 12		T	T	T	T
			630		12 T			T	T
TS800	N		800					T	T
	H		800					T	T
	L		800					T	T
TS1000	N	Trip units-Electronic	800					25 25	
			1000						25
	H		800					25 25	
			1000						25
	L		800					50 50	
			1000						50

Protective coordination
Motor protection discrimination table

Complementary technical information

Main: Susol MCCB **Branch: Susol MCCB**

Branch breaker	Main breaker		TD100N/H/L									
	Trip unit		Trip units-Thermal magnetic									
		Rating (A)	16	20	25	32	40	50	63	80	100	
TD100N/H/L	FMU	16							5	6.4	8	
		20								6.4	8	
		25								6.4	8	
		32									8	
		40										
		50										
		63										
		80										
		100										
TD160N/H/L	FMU	100										
		125										
		160										
TS100N/H/L	MTU	100										
TS160N/H/L	MTU	150										
TS250N/H/L	MTU	220										
TS400N/H/L	MTU	320										
TS630N/H/L	MTU	500										
TS100N/H/L	ETS	40										
		80										
		100										
TS160N/H/L	ETS	150										
TS250N/H/L	ETS	220										
TS400N/H/L	ETS	320										

	TD160N/H/L			TS250N/H/L		TS100N/H/L		TS160N/H/L TS250N/H/L			TS400N/H/L TS630N/H/L		TS800N/H/L	
	FMU			ATU		ETS		ETS			ETS/ETM		ETS/ETM	
	100	125	160	200	250	40	80	80	160	250	400	630	630	800
	12.5	12.5	12.5	20	25		1	0.9	1.75	36	T	T	T	T
	12.5	12.5	12.5	20	25		1	0.9	1.75	36	T	T	T	T
	12.5	12.5	12.5	20	25		1	0.9	1.75	36	T	T	T	T
	12.5	12.5	12.5	20	25				1.75	36	T	T	T	T
		12.5	12.5	20	25				1.75	36	T	T	T	T
			12.5	20	25				1.75	36	T	T	T	T
				20	25					36	T	T	T	T
					25					36	T	T	T	T
											T	T	T	T
											T	T	T	T
												T	T	T
												T	T	T
											T	T	T	T
												T	T	T
												T	T	T
		12.5	12.5	36	36				1.75	3.6	T	T	T	T
					36					3.6	T	T	T	T
											T	T	T	T
												T	T	T
												T	T	T

Protective coordination
Type 2 Coordination according to IEC60947-4-1

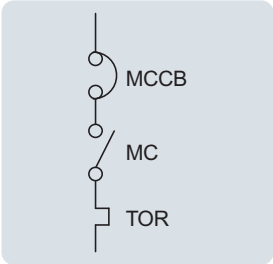

Performance: Ue=200/240V			
MCCB	N H		L
TD100 85kA		100kA	200kA
TS100 100kA		120kA	200kA

Motor		MCCB		Contactor	Thermal overload relay	
kW	A	Type	Rating Ir (A)	Type	Type	Setting range (A)
0.37 1.8		TD100	16	MC-9	MT-32	1.6-2.5
0.55 2.75		TD100	16	MC-32	MT-32	2.5-4
0.75	3.5 TD100		16	MC-32	MT-32	2.5-4
1.1 4.4		TD100	16	MC-40	MT-63	4-6
1.5	6.1 TD100		16	MC-40	MT-63	5-8
2.2 8.7		TD100	16	MC-40	MT-63	9-13
3 11.5		TD100	16	MC-40	MT-63	9-13
3.7 13.5		TD100	16	MC-40	MT-63	12-18
4 14.5		TD100	16	MC-40	MT-63	12-18
5.5 20		TD100	20	MC-40	MT-63	16-22
7.5 27		TD100	32	MC-40	MT-63	24-36
9 32		TD100	32	MC-85	MT-95	28-40
10 35		TD100	40	MC-85	MT-95	28-40
11 39		TD100	40	MC-85	MT-95	34-50
15 52		TD100	63	MC-85	MT-95	45-65
18.5 64		TD100 TS100	80 MC-85		MT-95	54-75
22 75		TD100 TS100	80 MC-85		MT-95	63-85
25 85		TD100 TS100	100 MC-85		MT-95	70-95

Protective coordination
Type 2 Coordination according to IEC60947-4-1

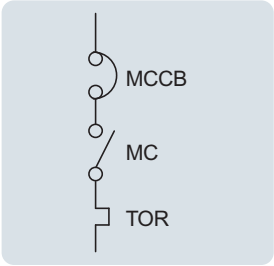

Performance: Ue=380/415V			
MCCB	N H		L
TD100 50kA		85kA 150kA	
TS100 50kA		85kA	150kA

Motor		MCCB		Contactor	Thermal overload relay	
kW	A	Type	Rating Ir (A)	Type	Type	Setting range (A)
0.37 1.03		TD100 16		MC-9	MT-32	1-1.6
0.55 1.6		TD100	16	MC-9	MT-32	1-1.6
0.75 2		TD100	16	MC-9	MT-32	1.6-2.5
1.1 2.6		TD100	16	MC-32	MT-32	2.5-4
1.5 3.5		TD100	16	MC-32	MT-32	2.5-4
2.2 5		TD100	16	MC-40	MT-63	4-6
3 6.6		TD100	16	MC-40	MT-63	5-8
3.7 7.7		TD100	16	MC-40	MT-63	6-9
4 8.5		TD100	16	MC-40	MT-63	7-10
5.5 11.5		TD100 16		MC-40	MT-63	9-13
7.5 15.5		TD100 16		MC-40	MT-63	12-18
9 18.5		TD100 20		MC-40	MT-63	16-22
10 20		TD100	20	MC-40	MT-63	16-22
11 22		TD100	25	MC-40	MT-63	16-22
15 30		TD100	32	MC-85	MT-95	24-36
18.5 37		TD100 TS100	40 MC-85		MT-95	28-40
22 44		TD100 TS100	50 MC-85		MT-95	34-50
25 52		TD100 TS100	63 MC-85		MT-95	45-65
30 60		TD100 TS100	63 MC-85		MT-95	45-65
33	68	TD100 TS100	80 MC-85		MT-95	54-75
37 72		TD100 TS100	80 MC-85		MT-95	63-85
40 79		TD100 TS100	80 MC-85		MT-95	63-85
45 85		TD100 TS100	100 MC-85		MT-95	70-95

Protective coordination
Type 2 Coordination according to IEC60947-4-1

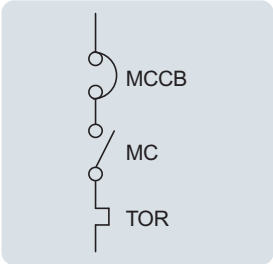

Performance: Ue=440V			
MCCB	N H		L
TD100 42kA		72kA	130kA
TS100 42kA		72kA	130kA

Motor		MCCB		Contactor	Thermal overload relay	
kW	A	Type	Rating Ir (A)	Type	Type	Setting range (A)
0.37 0.99		TD100	16	MC-9	MT-32	0.63-1
0.55 1.36		TD100	16	MC-9	MT-32	1-1.6
0.75 1.68		TD100	16	MC-9	MT-32	1.6-2.5
1.1	2.37 TD100		16	MC-9	MT-32	1.6-2.5
1.5 3.06		TD100	16	MC-18	MT-32	2.5-4
2.2 4.42		TD100	16	MC-25	MT-32	4-6
3 5.57		TD100	16	MC-25	MT-32	4-6
3.7 7.1		TD100	16	MC-32	MT-32	5-8
4 7.9		TD100	16	MC-32	MT-32	6-9
5.5 10.4		TD100	20	MC-32	MT-32	9-13
7.5 13.7		TD100	20	MC-32	MT-32	12-18
9 16.9		TD100	20	MC-40	MT-63	12-18
11 20.1		TD100	25	MC-40	MT-63	16-22
15 26.5		TD100	32	MC-40	MT-63	24-36
18.5 32.8		TD100 TS100	40 MC-50		MT-63	28-40
22 39		TD100 TS100	40 MC-50		MT-63	34-50
25 45.3		TD100 TS100	50 MC-50		MT-63	34-50
30 51.5		TD100 TS100	63 MC-65		MT-95	45-65
33 58		TD100 TS100	63 MC-65		MT-95	45-65
37 64		TD100 TS100	80 MC-65		MT-95	54-75
40 67		TD100 TS100	80 MC-85		MT-95	54-75
45	76	TD100 TS100	100 MC-85		MT-95	63-85

Protective coordination
Type 2 Coordination according to IEC60947-4-1

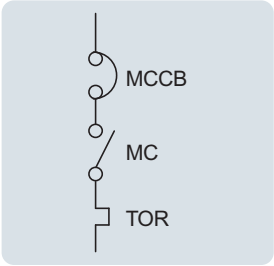

Performance: Ue=480/500V			
MCCB	N H		L
TD100 30kA		50kA	65kA
TS100 42kA		65kA	85kA

Motor		MCCB		Contactor	Thermal overload relay	
kW	A	Type	Rating Ir (A)	Type	Type	Setting range (A)
0.37 1		TD100	16	MC-9	MT-32	0.63-1
0.55 1.21		TD100 16		MC-9	MT-32	1-1.6
0.75 1.5		TD100	16	MC-9	MT-32	1-1.6
1.1 2		TD100	16	MC-9	MT-32	1.6-2.5
1.5 2.6		TD100	16	MC-32	MT-32	2.5-4
2.2 3.8		TD100	16	MC-32	MT-32	2.5-4
3 5		TD100	16	MC-40	MT-63	4-6
3.7 5.9		TD100	16	MC-40	MT-63	5-8
4 6.5		TD100	16	MC-40	MT-63	5-8
5.5 9		TD100	16	MC-40	MT-63	7-10
7.5 12		TD100	16	MC-40	MT-63	9-13
9 13.9		TD100 16		MC-40	MT-63	12-18
11 15		TD100	16	MC-85	MT-95	12-18
15 18.4		TD100 20		MC-85	MT-95	16-22
18.5 23		TD100	25	MC-85	MT-95	18-25
22 28.5		TD100 32		MC-85	MT-95	24-36
25 33		TD100 TS100	40 MC-85		MT-95	28-40
30 39.4		TD100 TS100	40 MC-85		MT-95	34-50
33 45		TD100 TS100	50 MC-85		MT-95	34-50
37	50	TD100 TS100	50 MC-85		MT-95	45-65
40	55	TD100 TS100	63 MC-85		MT-95	45-65
45 60		TD100 TS100	63 MC-85		MT-95	54-75

Protective coordination
Type 2 Coordination according to IEC60947-4-1

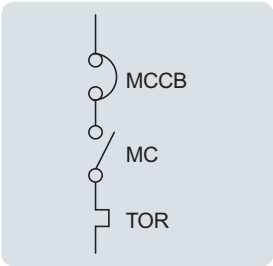

Performance: Ue=660/690V			
MCCB	N H		L
TD100 42kA		72kA	130kA
TS100 42kA		72kA	130kA

Motor		MCCB		Contactor	Thermal overload relay	
kW	A	Type	Rating Ir (A)	Type	Type	Setting range (A)
0.37 0.6		TD100	16	MC-9	MT-32	0.4~0.63
0.55 0.9		TD100	16	MC-9	MT-32	0.63-1
0.75 1.1		TD100	16	MC-9	MT-32	1-1.6
1.1 1.5		TD100	16	MC-9	MT-32	1-1.6
1.5 2		TD100	16	MC-32	MT-32	1.6-2.5
2.2 2.8		TD100	16	MC-32	MT-32	2.5-4
3 3.8		TD100	16	MC-32	MT-32	2.5-4
3.7 4.4		TD100	16	MC-40	MT-63	4-6
4 4.9		TD100	16	MC-40	MT-63	4-6
5.5 6.6		TD100	16	MC-40	MT-63	5-8
7.5 8.9		TD100	16	MC-40	MT-63	7-10
9 10.6		TD100	16	MC-85	MT-95	9-13
11 11.5		TD100	16	MC-85	MT-95	9-13
15 14		TD100	16	MC-85	MT-95	12-18
18.5 17.3		TD100	20	MC-85	MT-95	16-22
22 21.3		TD100	25	MC-85	MT-95	18-25
25 25.4		TD100	32	MC-85	MT-95	24-36
30 30.3		TD100	32	MC-85	MT-95	24-36
33 34.6		TD100 TS100	40 MC-85		MT-95	28-40
37 39		TD100 TS100	40 MC-85		MT-95	34-50
40 42		TD100 TS100	50 MC-85		MT-95	34-50
45 44		TD100 TS100	50 MC-85		MT-95	34-50

Protective coordination
Type 2 Coordination according to IEC60947-4-1]

440V - N type

Rated operational power		MCCB		Contactor	Thermal overload relays		Short circuit breaking capacity	
kW	Current[A] 440V	Type	Rating [A]	Type	Type	Setting range [A]	Ir[kA]	Iq[kA]
1.1	2.37	TD100N	16	MC-12b	MT-32	2.5~4	1	50
1.5	3.06	TD100N	16	MC-18b	MT-32	2.5~4	1	50
2.2	4.42	TD100N	16	MC-22b	MT-32	4~6	1	50
3	5.77	TD100N	16	MC-22b	MT-32	5~8	1	50
4	7.90	TD100N	16	MC-32a	MT-32	6~9	1	50
5.5	10.40	TD100N	16	MC-32a	MT-32	9~13	3	50
7.5	13.70	TD100N	20	MC-32a	MT-32	12~18	3	50
11	20.10	TD100N	32	MC-40a	MT-32	18~25	3	50
15	26.50	TD100N	40	MC-40a	MT-32	22~32	3	50
18.5	32.80	TS100N	40	MC-50a	MT-63	28~40	3	50
22	39.00	TS100N	50	MC-50a	MT-63	34~50	3	50
30	51.50	TS100N	63	MC-65a	MT-63	45~65	3	50
37	64.00	TS100N	80	MC-75a	MT-95	54~75	5	50
45	76.00	TS100N	100	MC-85a	MT-95	63~85	5	50
55	90.00	TS100N	100	MC-100a	MT-95	70~95	5	50
59	97.00	TS160N	100	MC-130a	MT-150	80~105	5	50
75	125	TS160N	160	MC-150a	MT-150	110~150	10	50
90	146	TS160N	160	MC-185a	MT-225	120~185	10	50
110	178	TS250N	200	MC-185a	MT-225	160~240	10	50
132	215	TS250N	250	MC-225a	MT-225	160~240	10	65
160	256	TS400N	300	MC-400a	MT-400	200~330	18	65
200	330	TS400N	400	MC-400a	MT-400	260~400	18	65
220	353	TS400N	400	MC-400a	MT-400	260~400	18	65
250	401	TS630N	500	MC-630a	MT-800	260~400	18	65
300	481	TS630N	500	MC-630a	MT-800	400~630	18	65

Protective coordination
Type 2 Coordination according to IEC60947-4-1]

440V - H type

Rated operational power		MCCB		Contactor	Thermal overload relays		Short circuit breaking capacity	
kW	Current[A] 440V	Type	Rating [A]	Type	Type	Setting range [A]	Ir[kA]	Iq[kA]
1.1	2.37	TD100H	16	MC-12b	MT-32	2.5~4	1	50
1.5	3.06	TD100H	16	MC-18b	MT-32	2.5~4	1	50
2.2	4.42	TD100H	16	MC-22b	MT-32	4~6	1	50
3	5.77	TD100H	16	MC-22b	MT-32	5~8	1	50
4	7.90	TD100H	16	MC-32a	MT-32	6~9	1	50
5.5	10.40	TD100H	16	MC-32a	MT-32	9~13	3	50
7.5	13.70	TD100H	20	MC-32a	MT-32	12~18	3	70
11	20.10	TD100H	32	MC-40a	MT-32	18~25	3	70
15	26.50	TD100H	40	MC-40a	MT-32	22~32	3	70
18.5	32.80	TS100H	40	MC-50a	MT-63	28~40	3	70
22	39.00	TS100H	50	MC-50a	MT-63	34~50	3	70
30	51.50	TS100H	63	MC-65a	MT-63	45~65	3	70
37	64.00	TS100H	80	MC-75a	MT-95	54~75	5	70
45	76.00	TS100H	100	MC-85a	MT-95	63~85	5	70
55	90.00	TS100H	100	MC-100a	MT-95	70~95	5	70
59	97.00	TS160H	100	MC-130a	MT-150	80~105	5	70
75	125	TS160H	160	MC-150a	MT-150	110~150	10	70
90	146	TS160H	160	MC-185a	MT-225	120~185	10	70
110	178	TS250H	200	MC-185a	MT-225	160~240	10	70
132	215	TS250H	250	MC-225a	MT-225	160~240	10	70
160	256	TS400H	300	MC-400a	MT-400	200~330	18	85
200	330	TS400H	400	MC-400a	MT-400	260~400	18	85
220	353	TS400H	400	MC-400a	MT-400	260~400	18	85
250	401	TS630H	500	MC-630a	MT-800	260~400	18	85
300	481	TS630H	500	MC-630a	MT-800	400~630	18	100

Protective coordination
Type 2 Coordination according to IEC60947-4-1]

440V - L type

Rated operational power		MCCB		Contactor	Thermal overload relays		Short circuit breaking capacity	
kW	Current[A] 440V	Type	Rating [A]	Type	Type	Setting range [A]	Ir[kA]	Iq[kA]
1.1	2.37	TD100L	16	MC-12b	MT-32	2.5~4	1	50
1.5	3.06	TD100L	16	MC-18b	MT-32	2.5~4	1	50
2.2	4.42	TD100L	16	MC-22b	MT-32	4~6	1	50
3	5.77	TD100L	16	MC-22b	MT-32	5~8	1	50
4	7.90	TD100L	16	MC-32a	MT-32	6~9	1	50
5.5	10.40	TD100L	16	MC-32a	MT-32	9~13	3	50
7.5	13.70	TD100L	20	MC-32a	MT-32	12~18	3	100
11	20.10	TD100L	32	MC-40a	MT-32	18~25	3	100
15	26.50	TD100L	40	MC-40a	MT-32	22~32	3	100
18.5	32.80	TS100L	40	MC-50a	MT-63	28~40	3	130
22	39.00	TS100L	50	MC-50a	MT-63	34~50	3	130
30	51.50	TS100L	63	MC-65a	MT-63	45~65	3	130
37	64.00	TS100L	80	MC-75a	MT-95	54~75	5	130
45	76.00	TS100L	100	MC-85a	MT-95	63~85	5	130
55	90.00	TS100L	100	MC-100a	MT-95	70~95	5	130
59	97.00	TS160L	100	MC-130a	MT-150	80~105	5	130
75	125	TS160L	160	MC-150a	MT-150	110~150	10	130
90	146	TS160L	160	MC-185a	MT-225	120~185	10	130
110	178	TS250L	200	MC-185a	MT-225	160~240	10	130
132	215	TS250L	250	MC-225a	MT-225	160~240	10	130
160	256	TS400L	300	MC-400a	MT-400	200~330	18	130
200	330	TS400L	400	MC-400a	MT-400	260~400	18	130
220	353	TS400L	400	MC-400a	MT-400	260~400	18	130
250	401	TS630L	500	MC-630a	MT-800	260~400	18	130
300	481	TS630L	500	MC-630a	MT-800	400~630	18	130

How to calculate short-circuit current value
Various short-circuit

The purpose of calculating short circuit values
- Selection of circuit breakers, fuse.
- Adjusting metering devices
- Consideration for mechanical resistance
- Consideration for thermal resistance

Various value of short-circuit current should be applied to the tests for upper factors.
Symmetrical current for AC and asymmetrical current for DC are used for classifying short circuit current.
Their differences should be essentially considered in the basic step of making network plan.

Symmetrical short-circuit current real value

Short-circuit current is composed of AC and DC as it shows on <Fig.1>. The short-circuit which indicates the real value of AC is called as symmetrical short-current real value, I (rms)sym. This current is the essential factor of selecting MCCB, ACB, fuse.

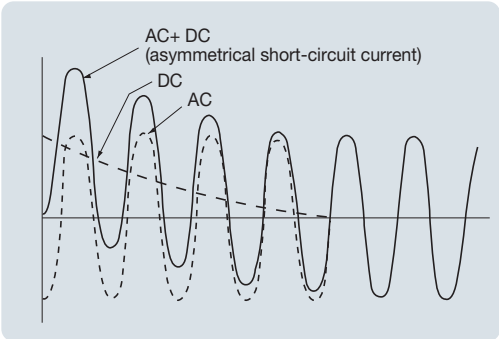

<Fig.1> Composition of short-circuit current

Maximum asymmetrical short-circuit current real value: I (rms)asym

The short-circuit which indicates the real value of DC is called as asymmetrical short-circuit current real value.
And this current value is changeable upon the short-circuit closing phase.
This current value is treated for checking the thermal resistant strength of wrings, CT and etc.
With symmetrical short-circuit current real value and short-circuit power factor, we can achieve the value, α from <Fig.5>.
and maximum asymmetrical short-circuit current real value is calculated with this formula.

$$I\ (rms)asym = \alpha I\ (rms)sym$$

3-phases average asymmetrical short-circuit current real value: I (rms)ave

Each phase is different in its input current value in 3 phases circuit. So that AC rate for 3 phases is different. This value is the average of asymmetrical short-circuit current of 3 phases. And with symmetrical short-circuit current real value and short-circuit power factor, we can achieve the value, β, and 3-phases average asymmetrical short circuit current real value is calculated with this formula.

$$I\ (rms)ave = \beta\ I\ (rms)sym$$

Maximum asymmetrical short-circuit current instantaneous value: Imax

Each phase has different instantaneous current value. And when asymmetrical short-circuit current shows its maximum instantaneous value, the current value is called as maximum asymmetrical short-circuit current instantaneous value. This current is to test the mechanical strength of serial equipments.
And with symmetrical short-circuit current real value and short-circuit power factor, we can achieve the value, γ and maximum asymmetrical short-circuit current instantaneous value is calculated with this formula.

$$Imax = \gamma I\ (rms)sym$$

Network impedance for calculating short-circuit current value

Bellows should be considered for the calculation as the impedance components affecting circuit to trouble spot from short-circuit power.

a. Primary part impedance of incoming transformer It's calculated from the short-circuit current data which is provided by power supplier. Calculated value can be regarded as reactance.

b. Impedance of incoming transformer Its amount is upon the capacity of transformer and primary voltage. Generally this impedance can be regarded as reactance and refer to <Table.4>, <Table.5>.

How to calculate short-circuit current value
Various short-circuit

c. Reactance of motor
Motor works as generator and supply short circuit current in the condition of an accident circuit such as <Fig.2>.
Generation factor of firm motor should be considered in a low voltage circuit where a circuit breaker operates quickly and in a high voltage circuit for the selection of fuse.
Reactance of motor can be regarded in the range of 25% normally.

d. Distribution impedance
Impedance of cable and busduct do control short-circuit remarkably in low voltage network. Refer to <Table.5>, <Table.6>.

e. Others
MCCB, ACB CT are equipments for the network of low voltage.
The impedance of these equipment which is calculated from short-circuit current value should be considered.
Generally, the impedance of those equipment is that of rated current (normal condition), if operators apply that impedance value, bigger reactance value may be applied to calculated short-circuit current value.

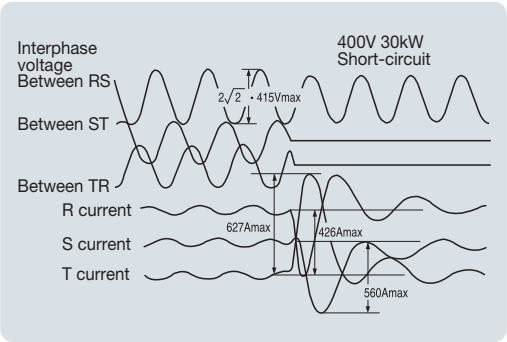

<Fig.2> Short-circuit of motor

How to calculate short-circuit current value With percent impedance

Ohm formula (Ω), percent impedance formula (%), unit formula (per unit) can be applied to calculate short-circuit current value.

Ohm formula [Ω]

Short-circuit current value is calculated by converting into ohm value [Ω]

Percent impedance formula (%) Each impedance is converted into the impedance of base value and base voltage.

And the required amount for electric demand should be shown as percent unit.
And apply that value in ohm formula.

Unit formula

The base value equals 1.0. and all value of network shows in the way of decimal system. Applying any of upper calculation formulas to achieve short-circuit current value, it shows equal value. To select a certain formula for doing it, operator can select one of those formula which is proper to oneself. Below is percent impedance formula.

Finding base value

The rated current of transformer shall be the base value.

Base capacity $P_B = P_T$ [kVA]

Base voltage $V_B = V_T$ [V]

Base current $I_B = I_T = \frac{P_T}{\sqrt{3}V_T} \times 10^3$ [A]

Base impedance $Z_B = \frac{V_B^2}{P_B \times 10^3} = \frac{V_T^2}{P_T \times 10^3}$ [Ω]

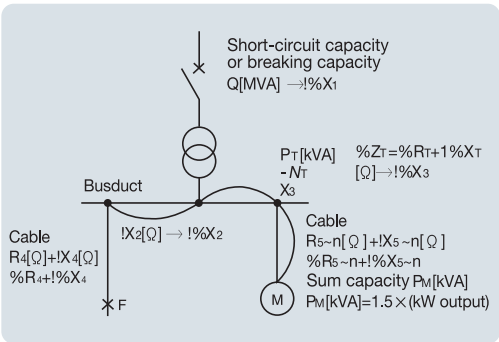

<Fig.3> Base value

Converting impedance into base value

a. Primary part impedance of transformer: $\%X_1$

$$\%X_1 = \frac{P_B}{Q \times 10^3} \times 100 \ [\%]$$

Q: Primary part short-circuit capacity

b. Impedance of transformer: %ZT
It generally indicates as percent impedance. If base capacity is equal to transformer capacity, %ZT can be used as it is. When base capacity is not equal to transformer capacity, convert values by this formula.

$$\frac{P_T}{\%Z_T} = \frac{P_B}{\%Z_B}$$

%: value converted by base value

1phase transformer should converted into the value of 3 phase transformer, And the percent impedance is equal to $\frac{\sqrt{3}}{2} \times$ calculated urgent value.

c. Reactance of motor: %Xm
Transformer capacity shows the value in kW, so it is converted into unit, kVA.
(kVA value) ≒ 1.5 × (Output of motor, kW)
%Xm= 25% Converting it from base capacity

$$\frac{P_M}{\%Xm} = \frac{P_B}{\%Xm}$$

(Converting formula for different capacity)

d. Impedance of busduct, cable
Cable: Area of cross-section & length
Busduct: Rated current

In <Fig.5>, <Fig.6>
Z_C = (Ω per each unit length) × (length) [Ω]
Convert this value into % value.

$$\%Z_C = \frac{Z_C}{Z_B}$$

(% converting formula)

2cables in same dimension, it's recommendable to divide the length by 2.

How to calculate short-circuit current value

Preparing a impedance map

Prepare impedance map according to the impedance value from (2). Various electricity suppliers like source, motor have same electric potential in impedance map.
As you find it on <Fig.4> (a), extend it from the unlimited bus to fault point, draw impedance map.

Calculating impedance

Calculate impedance as <Fig.4 (b)> in impedance map < Fig.4 (a)>

$\%Z = \%R + j\,\%X$

$\%Z = \sqrt{(\%R)^2 + (\%X)^2}$

Calculating symmetrical short-circuit current real value

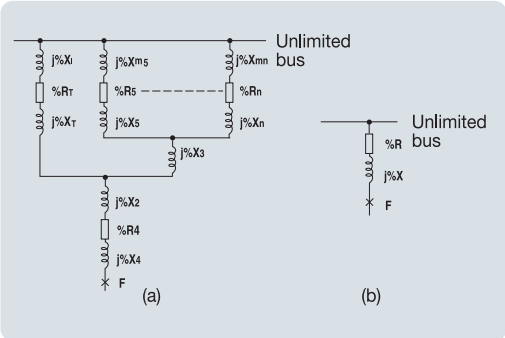

<Fig.4> Base value

Calculating various short-circuit current value

IF (3 ø) = IF (rms)sym (3 ø)

$$= \frac{P_B \times 10^3}{\sqrt{3}V_B \cdot \%Z} \times 100$$

$$= \frac{I_B}{\%Z} \times 100\,[A]$$

Calculate various short-circuit current value with α, β, γ values from <Fig.5> like

short-circuit power factor cos $\varnothing = \frac{\%R}{\%Z}$

3 phases average asymmetrical real value
I_F (rms)ave= βI_F (rms)sym
Maximum average asymmetrical real value
I_F (rms)asym= Ω I_F (rms)sym
Maximum asymmetrical instantaneous value
$I_F$max= γI_F (rms)sym

In case of 1 phase short-circuit

Current value from (5) multiplied by $\frac{\sqrt{3}}{2}$

Each short-circuit current value (1 ø)= $\frac{\sqrt{3}}{2}$ (3phases short-circuit current) × α (or γ)

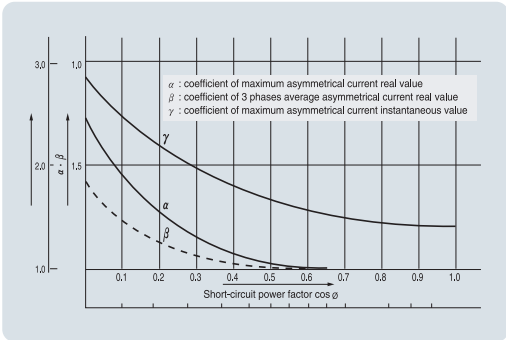

<Fig.5>

How to calculate short-circuit current value With a simple formula

For its special cases, calculating exact value should be needed, in the other hand, for the practical use, we recommend simple formula.

Finding a base value

It shall be the rated current of transformer.

P_B= PT [kVA]

V_B= VT [V]

I_B= IT [A]

$$Z_B = \frac{VT_B\ [\Omega]}{PT \times 103}$$

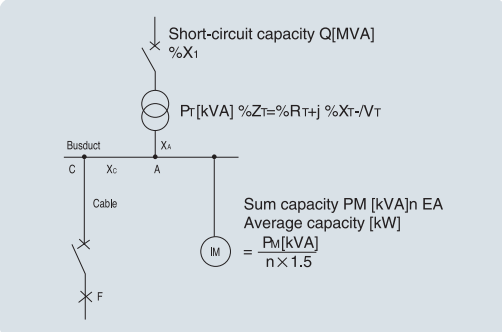

<Fig.6> Base value

Short-circuit current from incoming circuit

Disregard the impedance value of primary part of transformer. Calculate short-circuit current value according to <Fig.7>.
(If the impedance value of primary part of transformer is considered, calculate the current value as below formula)

$$I_A(R) = \frac{I_B}{\sqrt{(\%R_T)^2 + (\%X_1 + \%X_T)^2}} \times 100\,[A]$$

$$\%X_1 = \frac{P_B}{Q \times 10^3} \times 100\ [\%]$$

If the value of $\%R_T$ is not clear, $\%Z_T \fallingdotseq \%T_T$

$$I_A(R) = \frac{I_B}{\%X_1 + \%X_T} \times 100\,[A]$$

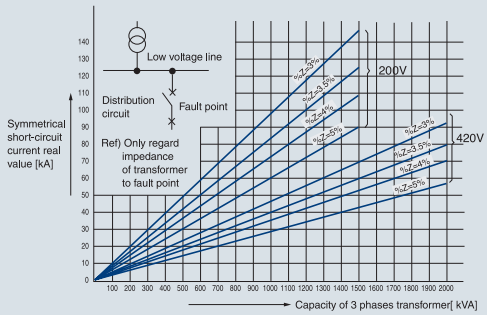

Ref 1) Calculation in the random voltage E Voltage line which is mostly close to E shall be selected to calculate it .
i.e. in case of 220V, (200V line value)÷200/220

Ref 2) Calculation for a certain impedance Zt (%) Impedance line which is mostly close to Zt (%) shall be selected to calculate it.
i.e. 420V, Zt= 4.5%
%Z=4% Line value (or 5% line) × 4 (or 5)/4.5

Ref 3) When the value is out of lines or over 200VA or below 100kA, multiply 10 times to the calculated values.

<Fig.7> Transformer capacity and short-circuit current

Short-circuit current to motor

I_A (M)= 4 × Σ (Rated current of motor)

Symmetrical short-circuit current at point A

$I_A = I_A(R) + I_A(M)$

Decreasing coefficient caused by busduct

Obtaining the value of $\frac{l \cdot I_A}{10VT}$

Calculate decreasing coefficient from <Fig.10>

Decreasing short-circuit current by reactance

When there's 1phase transformer in a certain circuit, calculate it in the base of reactance. Regarding the reactance as pre-impedance at source part at point of <Fig.8>,

$$X_C = \frac{E_B}{\sqrt{3}\, I_C}$$

Reactance C~D: X_D[Ω] (impedance of 1 ø T)

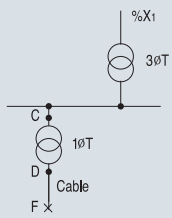

How to calculate short-circuit current value

Calculating the value of X_D/X_C and decreasing coefficient d from the reactance of <Fig.9>.
Current at point D $I_D = d \cdot I_C$

Impedance of 1 phase transformer $X_D = X(1\phi)\frac{1}{2}$

a. Short-circuit current at E_C voltage base
I_D (rms)sym · 3ø = d · I_C (rms)sym · 3ø

b. Short-circuit current at E_D voltage base
I_D (rms)sym · 3ø = d · I_C (rms)sym · 3ø × E_C/E_D

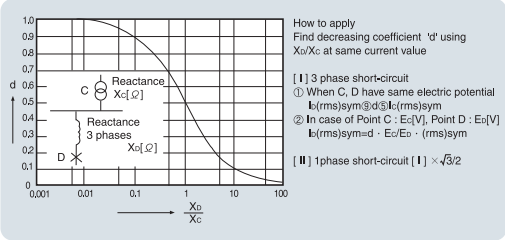

<Fig.9> Decreasing coefficient of short-circuit current by reactance: d

Coefficient d for cables

Calculating the value of $\frac{l\ I_D}{10V_T}$

Decreasing coefficient b value is calculated from <Fig.13>. For insulator drawn wrings, we can find the value directly from <Fig.13>.

Calculating symmetrical short-circuit current real value

I_F (rms)sym= b × I_D[D]

Various short-circuit current

In case of having short-circuit current power factor, find α, β, γ from <Fig.5>, If not find 3 values from <Table.1>

- 3 phases short-circuit asymmetrical current average value
  I_F (rms)ave= βI_F (rms)sym
- Maximum asymmetrical real value
  I_F (rms)ave= αI_F (rms)sym
- Maximum asymmetrical instantaneous value
  I_F (rms)ave= γI_F (rms)sym

<Table.2> α, β, γ values when short circuit power factor value is not definite.

Symmetrical short-circuit real value (A)	Variables		
	Maximum asymmetrical real value	3 phases short-circuit asymmetrical current average value	Maximum asymmetrical instantaneous value
2500	1.0	1.0	1.48
2501~5000	1.03	1.02	1.64
5001~1000	1.13	1.07	1.94
1001~15000	1.18	1.09	2.05
15001~25000	1.25	1.13	2.17
25000	1.33	1.17	2.29

1 phase short-circuit

(Each current)= $\frac{\sqrt{3}}{2}$ × 3 phases short-circuit current × γ (or α)

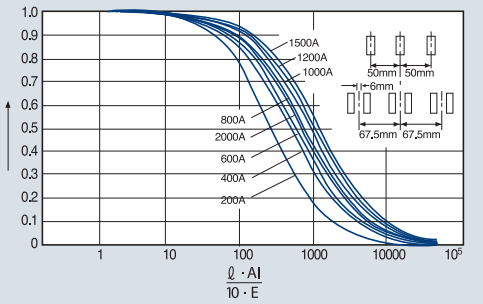

Busduct Ratings (A) Material		General busduct			
		Size [mm] [Ω/m]	Resistance R [Ω/m]	Reactance X [Ω/m]	Impedance Z [Ω/m]
Cu	200	3×25	2.41×10^{-4}	1.312×10^{-4}	2.74×10^{-4}
	400	6×40	0.751×10^{-4}	1.02×10^{-4}	1.267×10^{-4}
	600	6×50	0.607×10^{-4}	0.91×10^{-4}	1.094×10^{-4}
	800	6×75	0.412×10^{-4}	0.72×10^{-4}	0.830×10^{-4}
	1000	6×100	0.315×10^{-4}	0.60×10^{-4}	0.678×10^{-4}
	1200	6×125	0.261×10^{-4}	0.516×10^{-4}	0.578×10^{-4}
	1500	6×150	0.221×10^{-4}	0.449×10^{-4}	0.500×10^{-4}
	2000	6×125×2	0.129×10^{-4}	0.79×10^{-4}	0.800×10^{-4}

<Fig.10> Decreasing coefficient of general busduct (Cu)

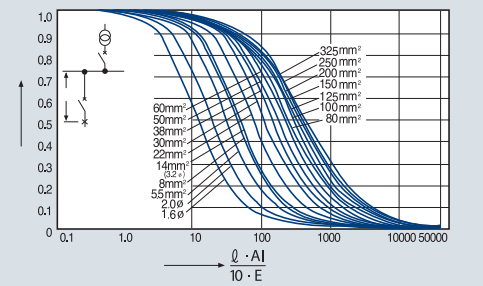

<Fig.11> Decreasing coefficient b in cable (600V IV)

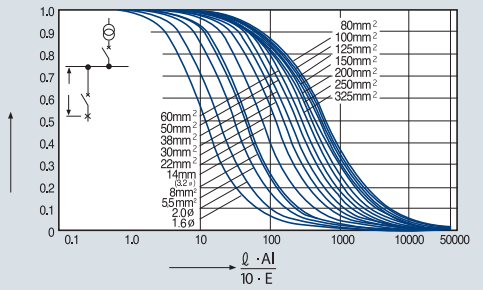

<Fig.12> Decreasing coefficient b in cable (600V IV)

How to calculate short-circuit current value
Calculation example

Calculation1) Short-circuit current value will be achieved by simple formula and percent impedance formula for <Fig.13>

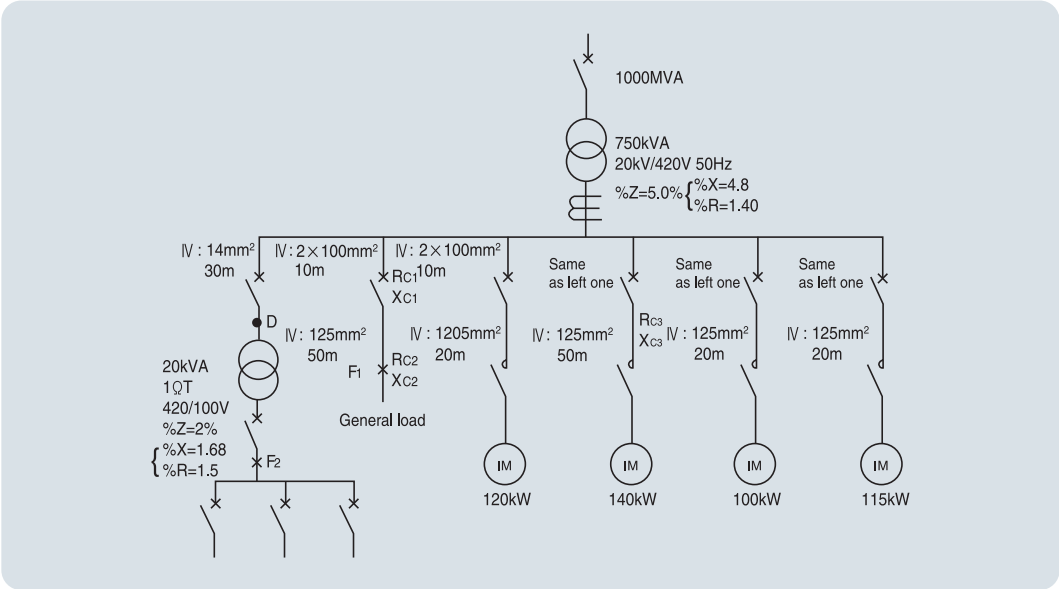

<Fig.13>

Percent impedance formula

(1) Base value

$P_B = 750kVA$ $V_B = 420V$

$I_B = 1031A$ $Z_B = 0.237\ \Omega$

(2) Each impedance

a. Reactance at primary part of transformer

$$\%X_1 = \frac{750}{1000 \times 10^3} \times 100 = 0.075\ [\%]$$

b. Impedance of transformer

$\%R_T = 1.4\%$

$\%X_T = 4.8\%$

c. 1 ø Tr impedance

$$\%R_{T1} = \frac{1.15 \times 750}{20} \times \frac{1}{2} = 21.6\ [\%]$$

$$\%X_{T1} = \frac{1.68 \times 750}{20} \times \frac{1}{2} = 31.5\ [\%]$$

d. Reactance of transformer

$$\%X_{m1} = \frac{750}{120 \times 1.5} \times 25 = 104\ [\%]$$

$$\%X_{m2} = \frac{750}{140 \times 1.5} \times 25 = 89\ [\%]$$

$$\%X_{m3} = \frac{750}{100 \times 1.5} \times 25 = 125\ [\%]$$

$$\%X_{m4} = \frac{750}{115 \times 1.5} \times 25 = 108.7\ [\%]$$

e. Impedance of cable

Converting impedance of whole metal tube

[2 × 100mm² 10m]

$$\%R_{C1} = \frac{0.00018 \times 10}{0.237} \times \frac{1}{2} \times 100 = 0.38\ [\%]$$

$$\%X_{C1} = \frac{0.00013 \times 10}{0.237} \times \frac{1}{2} \times 100 = 0.27\ [\%]$$

[125mm² 20m]

$$\%R_{C2} = \frac{0.00014 \times 20}{0.237} \times 100 = 1.18\ [\%]$$

$$\%X_{C2} = \frac{0.00013 \times 20}{0.237} \times 100 = 1.09\ [\%]$$

[250mm² 50m]

$$\%R_{C3} = \frac{0.00007 \times 50}{0.237} \times 100 = 1.47\ [\%]$$

$$\%X_{C3} = \frac{0.00013 \times 50}{0.237} \times 100 = 2.74\ [\%]$$

[14mm² 30m]

$$\%R_{C4} = \frac{0.00013 \times 30}{0.237} \times 100 = 16.45\ [\%]$$

$$\%X_{C4} = \frac{0.00015 \times 30}{0.237} \times 100 = 1.88\ [\%]$$

How to calculate short-circuit current value

(3) Preparing a impedance map
Connect short-circuit supplier to the unlimited bus.

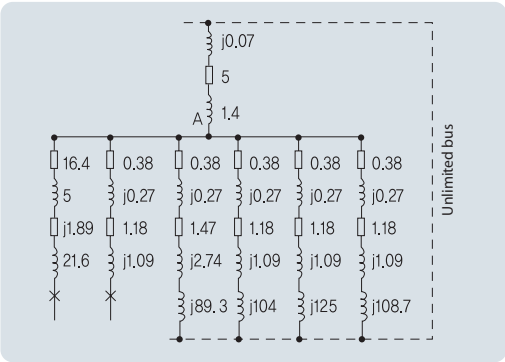

<Fig.14>

Calculating impedance

Calculate it in serial/parallel type formula

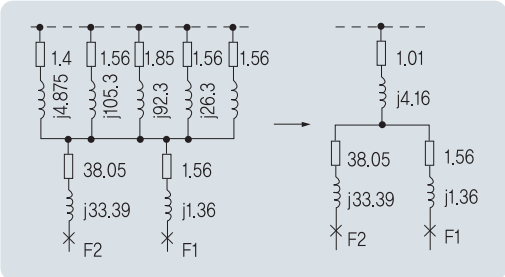

<Fig.15>

a. Fault point F_1 b. Fault point F_2

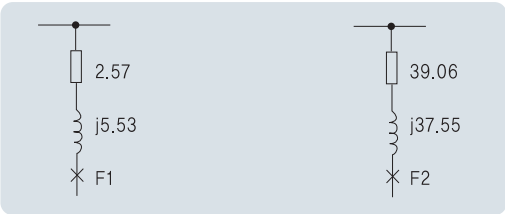

$\%Z_1 = \sqrt{(2.57)^2 + (5.53)^2} = 6.1[\%]$ $\%Z_2 = \sqrt{(39.06)^2 + (37.55)^2} = 54.2[\%]$

(5) Calculation of asymmetrical short-circuit current

a. Fault point F_1

I_{F1} (rms)sym $= \frac{1031}{6.1} \times 100 = 16900[A]$

$\cos \phi_1 = \frac{2.57}{6.1} = 0.422$

b. Fault point F_2 (1 phase circuit)

IF_2 (rms)sym $= \frac{1031}{54.2} \times 100 = 1902[A] \cdots$ (at 100V)

$= \frac{1031}{54.2} \times 100 \times \frac{420}{100} = 7989[A] \cdots$ (at 420V)

IF_2 (rms)sym is short-circuit current. Therefore, convert it into 1 phase short-circuit current.

IF_2 (rms)1 Ω sym $= 7989 \times \frac{\sqrt{3}}{2} = 6919[A]$

$\cos \phi_2 = \frac{39.06}{54.2} = 0.72$

(6) Various short-circuit current
Calculate α, β, γ from <Fig.5>.

a. Fault point F_1
$\cos \phi_1 = 0.422$
$\alpha = 1.05$ $\beta = 1.3$ $\gamma = 1.74$
I_{F1} (rms)ave $= 1.03 \times 16900 = 17407$ [A]
I_{F1} (rms)asym $= 1.05 \times 16900 = 17745$ [A]
I_{F1}max $= 1.74 \times 16900 = 29406$ [A]

b. Fault point F_2
$\cos \phi_2 = 0.72$
$\alpha = 1.0$ $\beta = 1.48$
I_{F2}1 ø (rms)asym $= 1.0 \times 6919$ [A]
I_{F2}1 ø max $= 1.48 \times 6919 = 10240$ [A]

Simple calculation formula

(1) Base value
$P_B = 750$kVA $V_B = 420$V
$I_B = 1031$A $Z_B = 0.237$ Ω

(2) Short-circuit current of incoming circuit
Disregard the impedance of primary part of transformer
In <Fig.7> $I_{A(R)} = 20500$ A

(3) Short-circuit current of motor
Sum of motor capacity=
$(120+140+100+115) \times 1.5 = 713$ [kVA]

$I_{A(M)} = \frac{713}{\sqrt{3} \times 420} \times 4 = 3920$ [A]

(4) Symmetrical short-circuit current at point A
$I_A = 20500+3920 = 24420$ [A]

How to calculate short-circuit current value
Calculation example

(5) Decreasing short-circuit current for cable

a. At point F_1

- $2 \times 100mm^2$ 10m

  $2 \times 100mm^2$ 10m= $100mm^2$ 5m

  $$\frac{l\ I_A}{10E} = \frac{20 \times 24420}{10 \times 420} = 29.1$$

  Coefficient b= 0.935

  Short-circuit current value at point C

  Ic (rms)sym= 0.935×24420= 22850 [A]

- $125mm^2$ 20m

  $$\frac{l\ I_C}{10E} = \frac{20 \times 22850}{10 \times 420} = 108.9$$

  I_{F1} (rms) sym= 0.785×244850= 17940 [A]

b. At point F_1

- $14mm^2$ 30m

  $$\frac{l\ I_C}{10E} = \frac{30 \times 24420}{10 \times 420} = 174.4$$

  Coefficient b= 0.249

  I_D (rms)3 ø sym= 0.24×24420= 6080 [A]

- Decreasing by the reactance (1 ø Tr)dp

  Convert the value of '%X of 1 ø Tr' to base capacity

  X_D= $750 \times 2/20$= 75%

  Impedance of primary part at 1 ø Tr

  $$XA = \frac{I_B}{I_D} \times 100 = \frac{1031}{6080} \times 100[\%]$$

  Convert X_D to equivalent 3 phases, and

  $$\frac{X_D/2}{X_A} = \frac{750 \times 2 \times 6080}{20 \times 2 \times 1031 \times 100} = 2.21$$

  Coefficient d of <Fig.9> d= 0.32

  I_{F2} (rms)3 ø sym= 0.32×6080=1945[A] (400V)

  = $0.32 \times 6080 \times 420/100$

  = 817 [A] (100V)

$$\therefore I_{F2}\ (rms)1\ø\ sym = 8171 \times \frac{\sqrt{3}}{2} = 7076\ [A]$$

(6) Various short-circuit current

Find α, β, γ from <Table.1>

a. At point F_1

α= 1.25 β = 1.13 γ = 2.17

IF1 (rms)ave= 1.13×17940= 20272 [A]

IF1 (rms)asym= 1.25×17940= 22425 [A]

IF1max= 2.17×17940= 38930 [A]

b. At point F_2

α= 1.13 γ= 1.94

IF21 ø (rms)asym= 1.13×7076= 7945 [A]

IF21 ø max= 1.94×7076= 13727 [A]

<Table.2> Comparison of short-circuit

Fault point		F_1	F_2
Symmetrical short-circuit current real value	Percent impedance calculation value	16900A	6919A
	Simple formula calculation value	17940A	7076A
		106%	102%
3 phases average asymmetrical current real value	Percent impedance calculation value	17407A	-
	Simple formula calculation value	20272A	-
		116%	-
Maximum asymmetrical current real value	Percent impedance calculation value	17745A	6919A
	Simple formula calculation value	22425A	7995A
		126%	115%

How to calculate short-circuit current value

Short-circuit current value will be achieved by simple formula for <Fig.16>

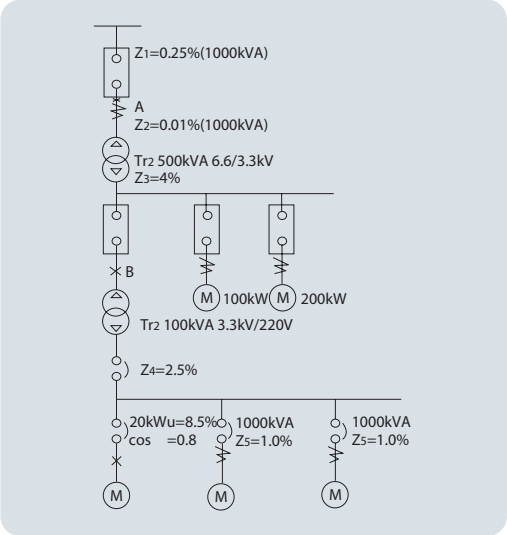

<Fig.16>

(1) Calculate rated current at each point

① Rated current I_{nA} at point A

$$I_{nA}=\frac{500[kVA]\times 1000}{\sqrt{3}\times 6.6[kV]\times 1000}=43.7[A]$$

② Rated current I_{nB} at point B

$$I_{nB}=\frac{100[kVA]\times 1000}{\sqrt{3}\times 3.3[kV]\times 1000}=17.5[A]$$

$$I_{nC}=\frac{20[kW]\times 1000}{\sqrt{3}\times 220[V]\times 0.85\times 0.8}=77.2[A]$$

(2) Put 1000k VA for base capacity and calculate short-circuit current at each point.

① Short-circuit current I_{SA} at point A

a) Impedance Map

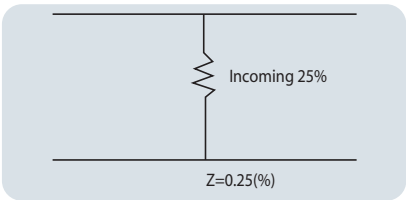

b) Short-circuit I_{SA}

$$I_{SA}=\frac{1000[kVA]\times 1000\times 100}{\sqrt{3}\times 6.6[kV]\times 1000\times 0.25\%}=34990[A]$$

∗ Breaking capacity of breaker [MVA]

MVA= 3 short-circuit current[kA] line to line voltage[kV]

② Short-circuit current at point B: I_{SB}

a) Impedance Map

∗ Serial sum of impedance

Ztot= 0.25+0.01+8= 8.26[%]

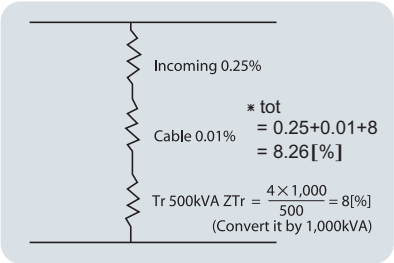

b) Short-circuit current I_{SC}

$$I_{SB}=\frac{1000[kVA]\times 1000\times 100}{\sqrt{3}\times 3.3[kV]\times 1000\times 8.26}=2118[A]$$

∗ Breaking capacity of breaker [MVA]

MVA= $\sqrt{3}$ short-circuit current [kA] line to line voltage[kV]

③ Short-circuit current at point C: I_{SC}

a) Impedance Map

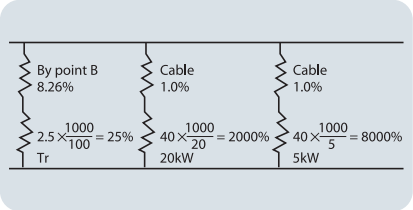

∗ Parallel sum of impedance

$$Z=\frac{1}{\frac{1}{33.26}+\frac{1}{2001}+\frac{1}{8001}}=32.58\ [\%]$$

b) Short-circuit current I_{SC}

$$I_{SC}=\frac{1000[kVA]\times 1000\times 100}{\sqrt{3}\times 220[V]\times 32.58[\%]}=8055\ [A]$$

Calculation formula

$$\text{Rated current In}=\frac{\text{Transformer capacity}}{\sqrt{3}\times\text{Rated voltage}}$$

$$\text{Short-circuit current Is}=\frac{\text{Transformer capacity}\times 100}{\sqrt{3}\times\text{Rated voltage}\times\%Z}$$

How to calculate short-circuit current value
Combination of transformer and impedance

<Table. 3> Combination of transformer and impedance

Transformer	3 phases transformer											
Impedance	6.3kV/210V Oil Tr.			6.3kV/210V Mold Tr.			20kV/420V Mold Tr.			20kV/420V Oil Tr.		
Transformer capacity (VA)	ZT[%]	RT[%]	XT[%]	ZT[%]	RT[%]	XT[%]	ZT[%]	RT[%]	XT[%]	ZT[%]	RT[%]	XT[%]
20	2.19	1.94	1.03									
30	2.45	1.92	1.53	4.7	2.27	4.12						
50	2.47	1.59	1.89	4.7	1.94	4.28						
75	2.35	1.67	1.66	4.4	1.56	4.11						
100	2.54	1.65	1.96	4.6	1.5	4.24						
150	2.64	1.64	2.07	4.2	1.29	4.0						
200	2.8	1.59	2.31	4.5	1.17	4.35						
300	3.26	1.46	2.92	4.5	1.2	4.33						
500	3.61	1.33	3.36	4.7	0.08	4.69	5.0	1.56	4.76	6.0	1.0	5.92
750	4.2	1.55	3.9	6.0	0.8	5.95	5.0	1.40	4.80	6.0	0.9	5.93
1000	5.0	1.35	4.82	7.0	0.7	6.96	5.0	1.26	4.84	6.0	0.8	5.95
1500	5.1	1.22	4.95	7.0	0.6	6.97	5.5	1.2	5.37	7.0	0.75	6.96
2000	5.0	1.2	4.85	7.5	0.65	7.47	5.5	1.1	5.39	7.0	0.7	6.96

<Table. 4> Example of transformer impedance

Transformer	1 phase transformer					
Impedance	6.3kV/210V Oil Tr.			6.3kV/210V Mold Tr.		
Transformer capacity (VA)	ZT[%]	RT[%]	XT[%]	ZT[%]	RT[%]	XT[%]
10				14.9	14.9	0.268
20				14.0	14.0	0.503
30				14.8	14.8	0.523
50				13.6	13.6	0.494
75				11.0	11.0	0.558
100				8.87	8.85	0.562
200				7.70	7.68	0.571
300				5.75	5.69	0.619
500				5.08	4.97	1.05
750				5.05	4.92	1.16
1000				4.03	3.93	0.904
2000				4.55	4.50	0.637
3000				4.29	4.22	0.768
5000				3.26	3.18	0.725
7500				2.72	2.81	0.775
10000	2.5	2.07	1.40	2.33	2.18	0.823
15000	2.37	1.84	1.49	2.04	1.82	0.937
20000	2.57	1.76	1.87	1.90	1.60	1.02
30000	2.18	1.58	1.50			
50000	2.05	1.47	1.42			
75000	2.27	1.46	1.74			
100000	2.48	1.49	1.98			
150000	3.39	1.31	3.13			
200000	3.15	1.31	2.87			
300000	2.23	1.28	2.96			
500000	4.19	1.09	4.03			

<Table. 5> Example of cable impedance (600 vinyl cable)

Cable dimension	Impedance of cable 1m (Ω)			
	Internal insulation wiring or cable of steel tube and duct	Internal vinyl tube wiring of steel tube and duct	Insulator wiring in building	Resistance (Ω) / cable 1meter
ø 1.6mm	0.00020	0.00012	0.00031	0.0089
ø 2mm				0.0056
ø 3.2mm				0.0022
5.5mm²				0.0033
8mm²				0.0023
14mm²	0.00015	0.00010	0.00026	0.0013
22mm²				0.00082
30mm²				0.00062
38mm²				0.00048
50mm²	0.00013	0.00009	0.00022	0.00037
60mm²				0.00030
80mm²				0.00023
100mm²				0.00018
125mm²				0.00014
150mm²				0.00012
200mm²				0.00009
250mm²				0.00007
325mm²				0.00005

<Remark1> At 60Hz, the reactance multiply 2 times itself, so 1/2 reactance of primary part can achieve IB.
<Remark2> When the cable is parallelly 2 or 3ea, reactance and resistance can be calculated in the condition of 1/3 and 1/3 length cable.

How to calculate short-circuit current value
Various short-circuit

<Table.6> Impedance sample of bus and busduct (50Hz)

[$\times 10^{-4}$ Ω /m]

Ampere rating (A)	50Hz			60Hz		
	R	X	Z	R	X	Z
600	1.257	0.323	1.297	1.385	0.387	1.438
800	0.848	0.235	0.879	0.851	0.282	0.896
1000	0.641	0.185	0.667	0.645	0.222	0.682
1200	0.518	0.152	0.540	0.523	0.183	0.554
1350	0.436	0.129	0.454	0.443	0.155	0.469
1500	0.378	0.113	0.394	0.386	0.135	0.409
1600	0.360	0.107	0.375	0.367	0.128	0.389
2000	0.286	0.084	0.298	0.293	0.101	0.310
2500	0.218	0.065	0.228	0.221	0.078	0.235
3000	0.180	0.054	0.188	0.184	0.064	0.195
3500	0.143	0.042	0.149	0.146	0.051	0.155
4000	0.126	0.038	0.131	0.129	0.045	0.136
4500	0.120	0.036	0.125	0.122	0.043	0.130
5000	0.095	0.028	0.099	0.098	0.034	0.103

<Table.6> Impedance sample of Bus and busduct (50Hz)

[$\times 10^{-4}$ Ω /m]

Ampere rating (A)	50Hz			60Hz		
	R	X	Z	R	X	Z
600	0.974	0.380	1.045	0.977	0.456	1.078
800	0.784	0.323	0.848	0.789	0.387	0.879
1000	0.530	0.235	0.580	0.536	0.282	0.606
1200	0.405	0.185	0.445	0.412	0.222	0.468
1350	0.331	0.152	0.364	0.338	0.183	0.384
1500	0.331	0.152	0.364	0.338	0.183	0.384
1600	0.282	0.129	0.311	0.289	0.155	0.328
2000	0.235	0.107	0.259	0.241	0.128	0.273
2500	0.166	0.076	0.182	0.169	0.091	0.192
3000	0.141	0.065	0.155	0.144	0.078	0.164
3500	0.122	0.056	0.135	0.127	0.068	0.143
4000	0.110	0.051	0.121	0.113	0.061	0.126
4500	0.094	0.043	0.104	0.096	0.052	0.109
5000	0.082	0.038	0.091	0.084	0.045	0.096
5500	0.078	0.035	0.086	0.080	0.043	0.091
6500	0.068	0.028	0.074	0.071	0.031	0.077

How to calculate short-circuit current value
Calculation example

Using a certain graph, you can find and calculate the short-circuit current value which is at one position of network. No matter the condition of network is different, you can do the calculation through adjusting variables.

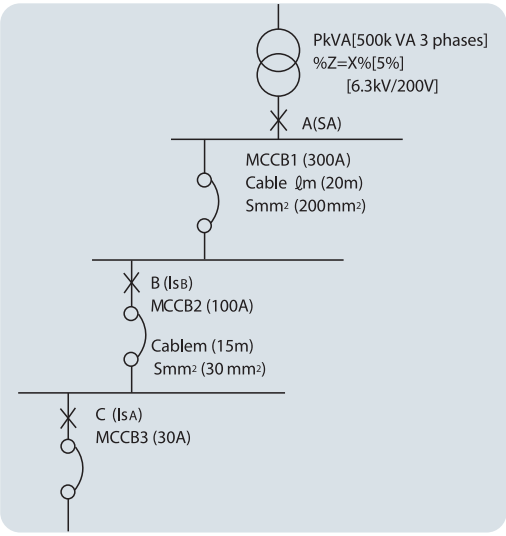

Graph note

P coordinates – Transformer capacity (kVA)
Is_1 coordinates – Short-circuit current value (kA)
Is_2 coordinates – Short-circuit current value affected cable condition (kA)
ⓐ Line - % impedance of transformer (%)
ⓑ Line - Length of cable (m)
ⓒ Line - Square mm of cable (mm^2)
ⓓ Line - Is_2 (kA)

Remark) ⓒ line shows the length of hard vinyl cable (600V IV)

How to calculate short-circuit current value

(1) 3 phases transformer
① Short-circuit current value at (A) where it is just below transformer. At P coordinates, find the coordinates value (g) of the cross point (f) which is from transformer capacity (e) and A line. Disregard primary part impedance of transformer.
② Find the short-circuit current value at Point B, C which are considered cable impedance.
- At short-circuit current g (kA) of Is_1 coordinates, find the value (h) of B line
- Move (h) to parallel direction of Is, and find the cross point (i) to C line.
- Move (i) to parallel direction of Is_2, and find the cross point value (j) to D line (g), finally find (k) of Is_2

(2) 1 phase transformer
① Short-circuit current value where it is just below transformer. Find the value as same as that of 3 phase transformer and multiply it 3 times. (g'kA)
② Find the short-circuit current value where it is considered cable impedance.
- Multiply 2/3 times to g' of Is coordinates
- Find the Is_2 value as same as that of 3 phase transformer and multiply it 3/2 times.

Remark

1. It's not considered the transformer contribution. Multiply 4 times the rated current of transformer in cases.
2. The real short-circuit current value is littler lower that its calculated value by the way we suggest because we take the rated voltage as AC200V, 400V. So the current value should be calculated in the consideration of stability
3. The calculated value is symmetrical real value.

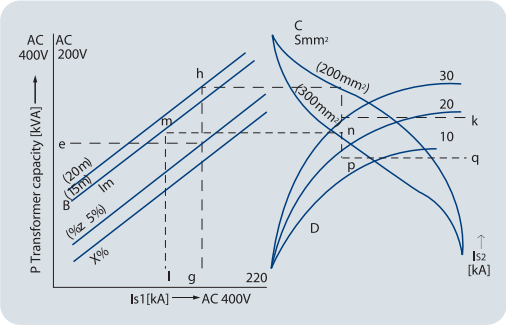

Memo

How to calculate short-circuit current value
Calculation graph

(1) Short-circuit current value at point A (I_{SA})

- At P coordinates, find (f) which is the point which is to match transformer capacity 500kVA and A line. Then move (f) to Is_1 direction and finally find (g).
- I_{SA}= 29kVA (g)

(2) Short-circuit current value at point B (I_{SB})

- Find value h of B line (20mm) at g (= 29kA) of Is_1 coordinates
- Move h parallely to the direction of Is_1, and find value I at the cross point with C line (200mm)
- Move I parallely to the direction of Is_2, and find value j at the cross point with D line (g= 29kA)
- I_{SB}= 19kA (k)

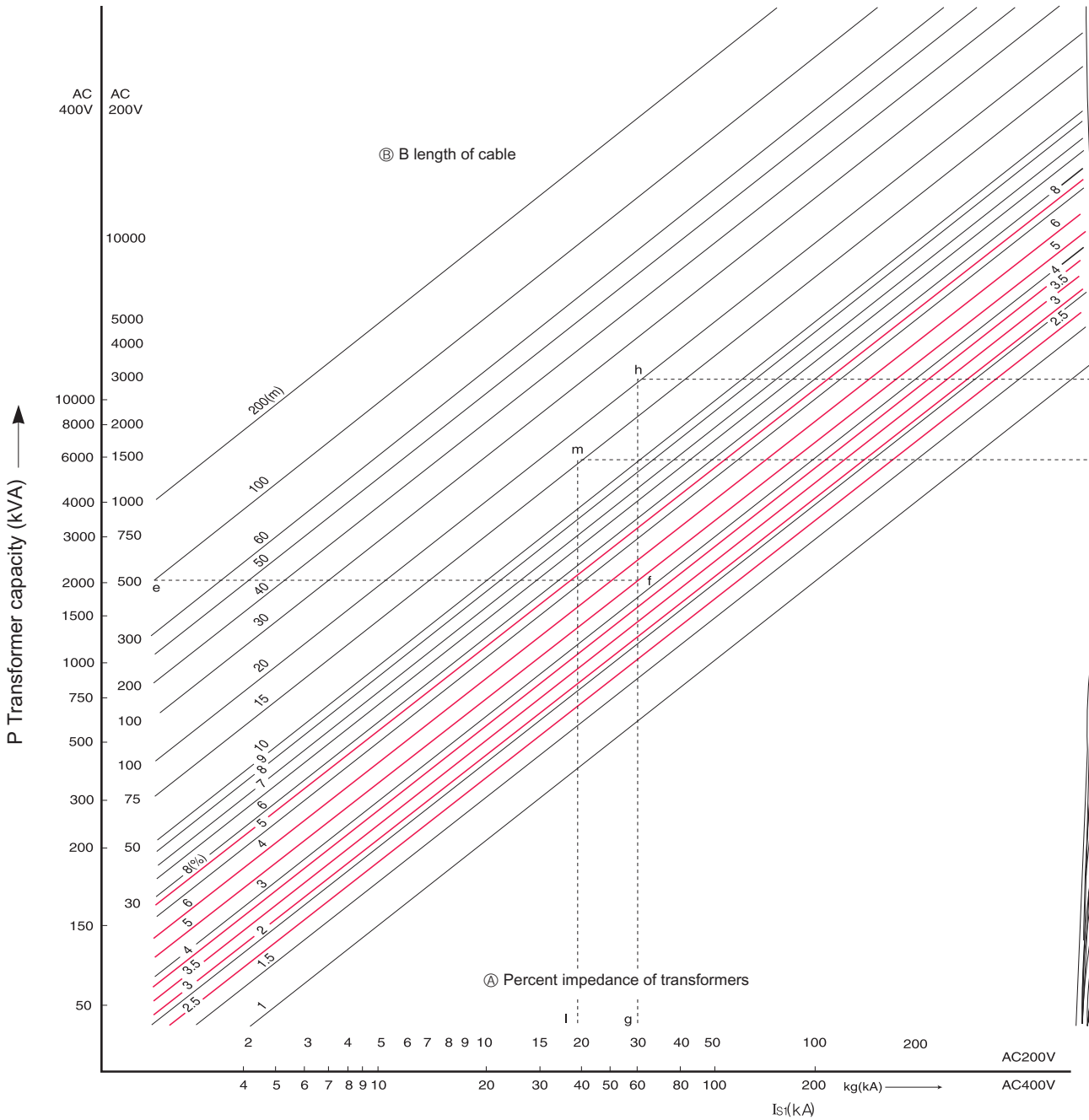

(3) Short-circuit current value at point C (I_{SC})

- Find Is_1 coordinates value (19kA) of short-circuit current value k (= 19kA) at Point B. and find cross point m between 19kA and B line.
- Move m parallely to the direction of Is_1 coordinates, and find the cross point n at C line (30mm).
- Move n parallely to the direction of Is_1 and find the cross point p of Is_2 with D line.
- Isc= 10kA (g)

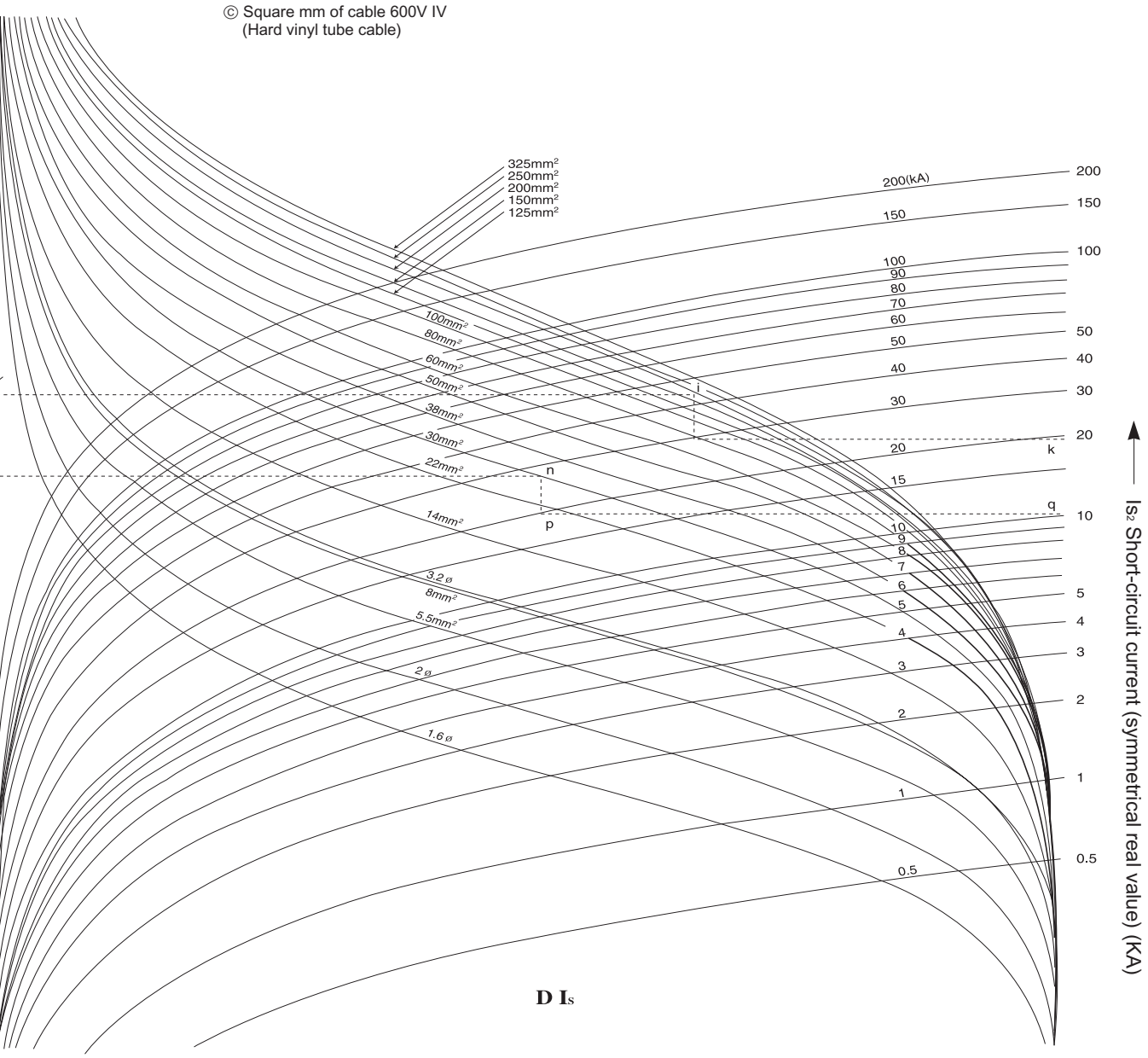

Certifications

Susol

Type		Approvals						Certificates
	Cerficate	Safety certi	IEC	UL	cUL	GB	Gosstandart	KEMA
	Mark and name		CE	UL	cUL	CCC	GOST KEMA	
Type		Korea	Europe	U.S.A	U.S.A	China	Russia	Netherlands
MCCB Susol	TE100S		●					●
	TE100N		●					●
	TD100N	●	●			●	●	●
	TD100H	●	●			●	●	●
	TD100L	●	●			●	●	●
	TD160N	●	●			●	●	●
	TD160H	●	●			●	●	●
	TD160L	●	●			●	●	●
	TS100N	●	●			●	●	●
	TS100H	●	●			●	●	●
	TS100L	●	●			●	●	●
	TS160N	●	●			●	●	●
	TS160H	●	●			●	●	●
	TS160L	●	●			●	●	●
	TS250N	●	●			●	●	●
	TS250H	●	●			●	●	●
	TS250L	●	●			●	●	●
	TS400N	●	●			●	●	●
	TS400H	●	●			●	●	●
	TS400L	●	●			●	●	●
	TS630N	●	●			●	●	●
	TS630H	●	●			●	●	●
	TS630L	●	●			●	●	●
	TS800N		●			●	●	●
	TS800H		●			●	●	●
	TS800L		●			●	●	●
	TS100 ETS	●	●			●	●	●
	TS160 ETS	●	●			●	●	●
	TS250 ETS	●	●			●	●	●
	TS400 ETS	●	●			●	●	●
	TS400 ETM	●	●			●	●	●
	TS630 ETS	●	●			●	●	●
	TS630 ETM	●	●			●	●	●
	TS800 ETS		●			●	●	●
	TS800 ETM		●			●	●	●
	TS1000N		●					●
	TS1250N		●					●
	TS1600N		●					●
	TS1000H		●					●
	TS1250H		●					●
	TS1600H		●					●
	TS1000L		●					●
MCCB Susol UL	TD125NU			●	●			
	TD125HU			●	●			
	TS250NU			●	●			
	TS250HU			●	●			
	TS400NU			●	●			
	TS400NU			●	●			
	TS800NU			●	●			
	TS800HU			●	●			

Note) ●: Completion

Certifications

Susol

Type	Type	Approvals						
	Mark and name	KR	LR	BV	ABS	GL	DNV	RINA
		Korea	U.K	France	U.S.A	Germany	Norway	Italy
TD 100AF	TD100E	●	●	●			●	●
	TD100S	●	●	●			●	●
	TD100P	●	●	●			●	●
	TD100N FTU	●	●	●	●	●	●	●
	TD100N FMU	●	●	●	●	●	●	●
	TD100H FTU	●	●	●	●	●	●	●
	TD100H FMU	●	●	●	●	●	●	●
	TD100L FTU	●	●	●	●	●	●	●
	TD100L FMU	●	●	●	●	●	●	●
TD 160AF	TD160E	●	●	●			●	●
	TD160S	●	●	●			●	●
	TD160P	●	●	●			●	●
	TD160N FTU	●	●	●	●	●	●	●
	TD160N FMU	●	●	●	●	●	●	●
	TD160H FTU	●	●	●	●	●	●	●
	TD160H FMU	●	●	●	●	●	●	●
	TD160L FTU	●	●	●	●	●	●	●
	TD160L FMU	●	●	●	●	●	●	●
TS 100AF	TS100E	●	●	●			●	●
	TS100E ETS	●	●	●			●	●
	TS100S	●	●	●			●	●
	TS100S ETS	●	●	●			●	●
	TS100P	●	●	●			●	●
	TS100P ETS	●	●	●			●	●
	TS100N FTU	●	●	●	●	●	●	●
	TS100N FMU	●	●	●	●	●	●	●
	TS100N ETS	●	●	●	●	●	●	●
	TS100H FTU	●	●	●	●	●	●	●
	TS100H FMU	●	●	●	●	●	●	●
	TS100H ETS	●	●	●	●	●	●	●
	TS100L FTU	●	●	●	●	●	●	●
	TS100L FMU	●	●	●	●	●	●	●
	TS100L ETS	●	●	●	●	●	●	●
TS 160AF	TS160E	●	●	●			●	●
	TS160E ETS	●	●	●			●	●
	TS160S	●	●	●			●	●
	TS160S ETS	●	●	●			●	●
	TS160P	●	●	●			●	●
	TS160P ETS	●	●	●			●	●
	TS160N FTU	●	●	●	●	●	●	●
	TS160N FMU	●	●	●	●	●	●	●
	TS160N ATU	●	●	●	●	●	●	●
	TS160N ETS	●	●	●	●	●	●	●
	TS160H FTU	●	●	●	●	●	●	●
	TS160H FMU	●	●	●	●	●	●	●
	TS160H ATU	●	●	●	●	●	●	●
	TS160H ETS	●	●	●	●	●	●	●
	TS160L FTU	●	●	●	●	●	●	●
	TS160L FMU	●	●	●	●	●	●	●
	TS160L ATU	●	●	●	●	●	●	●
	TS160L ETS	●	●	●	●	●	●	●

Note) ●: Completion

Marine certifications

Susol

Type	Type / Mark and name	KR	LR	BV	ABS	GL	DNV	RINA
		Korea	U.K	France	U.S.A	Germany	Norway	Italy
TS 250AF	TS250E	●	●	●			●	●
	TS250E ETS	●	●	●			●	●
	TS250S	●	●	●			●	●
	TS250S ETS	●	●	●			●	●
	TS250P	●	●	●			●	●
	TS250P ETS	●	●	●			●	●
	TS250N FTU	●	●	●	●	●	●	●
	TS250N FMU	●	●	●	●	●	●	●
	TS250N ATU	●	●	●	●	●	●	●
	TS250N ETS	●	●	●	●	●	●	●
	TS250H FTU	●	●	●	●	●	●	●
	TS250H FMU	●	●	●	●	●	●	●
	TS250H ATU	●	●	●	●	●	●	●
	TS250H ETS	●	●	●	●	●	●	●
	TS250L FTU	●	●	●	●	●	●	●
	TS250L FMU	●	●	●	●	●	●	●
	TS250L ATU	●	●	●	●	●	●	●
	TS250L ETS	●	●	●	●	●	●	●
TS 400AF	TS400E	●	●	●			●	●
	TS400E ETS	●	●	●			●	●
	TS400E ETM	●	●	●			●	●
	TS400S	●	●	●			●	●
	TS400S ETS	●	●	●			●	●
	TS400S ETM	●	●	●			●	●
	TS400P	●	●	●			●	●
	TS400P ETS	●	●	●			●	●
	TS400P ETM	●	●	●			●	●
	TS400N FTU	●	●	●	●	●	●	●
	TS400N FMU	●	●	●	●	●	●	●
	TS400N ATU	●	●	●	●	●	●	●
	TS400N ETS	●	●	●	●	●	●	●
	TS400N ETM	●	●	●	●	●	●	●
	TS400H FTU	●	●	●	●	●	●	●
	TS400H FMU	●	●	●	●	●	●	●
	TS400H ATU	●	●	●	●	●	●	●
	TS400H ETS	●	●	●	●	●	●	●
	TS400H ETM	●	●	●	●	●	●	●
	TS400L FTU	●	●	●	●	●	●	●
	TS400L FMU	●	●	●	●	●	●	●
	TS400L ATU	●	●	●	●	●	●	●
	TS400L ETS	●	●	●	●	●	●	●
	TS400L ETM	●	●	●	●	●	●	●
TS 630AF	TS630E	●	●	●			●	●
	TS630E ETS	●	●	●			●	●
	TS630E ETM	●	●	●			●	●
	TS630S	●	●	●			●	●
	TS630S ETS	●	●	●			●	●
	TS630S ETM	●	●	●			●	●
	TS630P	●	●	●			●	●
	TS630P ETS	●	●	●			●	●
	TS630P ETM	●	●	●			●	●

Note) ●: Completion

Certifications

Susol

Type	Type	Approvals						
	Mark and name	KR	LR	BV	ABS	GL	DNV	RINA
		Korea	U.K	France	U.S.A	Germany	Norway	Italy
TS 630AF	TS630N FTU	●	●	●	●	●	●	●
	TS630N FMU	●	●	●	●	●	●	●
	TS630N ATU	●	●	●	●	●	●	●
	TS630N ETS	●	●	●	●	●	●	●
	TS630N ETM	●	●	●	●	●	●	●
	TS630H FTU	●	●	●	●	●	●	●
	TS630H FMU	●	●	●	●	●	●	●
	TS630H ATU	●	●	●	●	●	●	●
	TS630H ETS	●	●	●	●	●	●	●
	TS630H ETM	●	●	●	●	●	●	●
	TS630L FTU	●	●	●	●	●	●	●
	TS630L FMU	●	●	●	●	●	●	●
	TS630L ATU	●	●	●	●	●	●	●
	TS630L ETS	●	●	●	●	●	●	●
	TS630L ETM	●	●	●	●	●	●	●
TS 800AF	TS800E	●	●	●			●	●
	TS800E ETS	●	●	●			●	●
	TS800E ETM	●	●	●			●	●
	TS800S	●	●	●			●	●
	TS800S ETS	●	●	●			●	●
	TS800S ETM	●	●	●			●	●
	TS800P	●	●	●			●	●
	TS800P ETS	●	●	●			●	●
	TS800P ETM	●	●	●			●	●
	TS800N FTU	●	●	●	●	●	●	●
	TS800N FMU	●	●	●	●	●	●	●
	TS800N ATU	●	●	●	●	●	●	●
	TS800N ETS	●	●	●	●	●	●	●
	TS800N ETM	●	●	●	●	●	●	●
	TS800H FTU	●	●	●	●	●	●	●
	TS800H FMU	●	●	●	●	●	●	●
	TS800H ATU	●	●	●	●	●	●	●
	TS800H ETS	●	●	●	●	●	●	●
	TS800H ETM	●	●	●	●	●	●	●
	TS800L FTU	●	●	●	●	●	●	●
	TS800L FMU	●	●	●	●	●	●	●
	TS800L ATU	●	●	●	●	●	●	●
	TS800L ETS	●	●	●	●	●	●	●
	TS800L ETM	●	●	●	●	●	●	●

Note) ●: Completion