FUTURING SMART ENERGY

www.lsis.com

NEW

Human Machine Interfaces

efficient XGT Panel eXP Series

Effective Control and Monitoring Solution Cost-Efficient eXP!

- Simple Design
- 4.3", 7" and 10.2" wide-screen sizes TFT color LCD
- Wide variety of communication interfaces
  - 2~3-channel serial communication
  - Ethernet
- Large memory for drawing (64MB)
- RTC function (maintained by battery)
- Convenient downloading/uploading of drawings via USB port in the front

LS IS

Human Machine Interfaces
efficient XGT Panel

eXP Series

- TFT LCD-applied wide type
- LED Backlight adopted for enhanced contrast ratio and low-power
- PLC Ladder monitoring function: Only XGK/XBC supports*
- Web Server* / Data Server* / Path-Through Function*
- Remote Viewer Function*
- Screen editor : XP-Builder

*Functions supported by TTA model only

Specifications

Item		eXP20-TTA/DC	eXP40-TTE/DC	eXP40-TTA/DC	eXP60-TTA/DC
Display Type		TFT color LCD			
Display Size		10.9cm (4.3 inch)	17.7cm (7 inch)		25.9cm (10.2 inch)
Resolution		480 x 272 (WQVGA)	800 x 480 (WVGA)		
Color		16.7M colors			65,536 colors
Display Angle		Left/Right: 60 deg. Up: 40 deg. Down: 60 deg.			Left/Right: 55 deg. Up: 35 deg. Down: 55 deg.
Backlight		LED mode, Auto On/Off			
Backlight Capacity		30,000 hr or more	20,000 hr or more		
Brightness (LCD)		550 cd/㎡	500 cd/㎡		350 cd/㎡
Touch Panel		4-wire system, Analogue			
Sound		Magnetic buzzer (85dB)			
Processor		ARM9 Core (32bit RISC), 454MHz			
Memory	Flash	128MB(Screen 64MB)			
	Operation RAM	128MB			
	Backup RAM	128KB			
Backup Type		Date/Time data, Logging/Alarm/Recipe data, non-volatile device			
Battery Capacity		Around 3 years (Upon operation at 25℃)			
RTC Function		Built-in			
Ethernet		1 channel, 10/100BASE-TX	-	1 channel, 10/100BASE-TX	
USB Port		1 channel, USB 2.0 host (mouse, keyboard, printer* and USB memory driver is available)			
		-	1 channel, USB 2.0 slave (for download and upload project file)		
RS-232C		1 channel			
RS-485		-	1 channel		
RS-422/485		1 channel, 422/485 Combination			
Multi-language		Up to 12 language simultaneously			
Animation		GIF format is available			
Recipe		available			
Data logging		available			
Script executor		available			
Certification		CE, UL(cUL), KC			
Protection		IP65			
Size (mm)		128.0 × 102.0 × 32.0	208.0 × 154.0 × 44.0		276.0 × 218.0 × 44.2
Panel Cut (mm)		119.0 × 93.0	192.0 × 138.0		260.0 × 202.0
Power		DC24V			
Power Consumption (W)		7.1	23.1		
Weight (kg)		0.3	0.59	0.60	1.0

*SEWOO printer only

Dimensions

[Unit: mm]

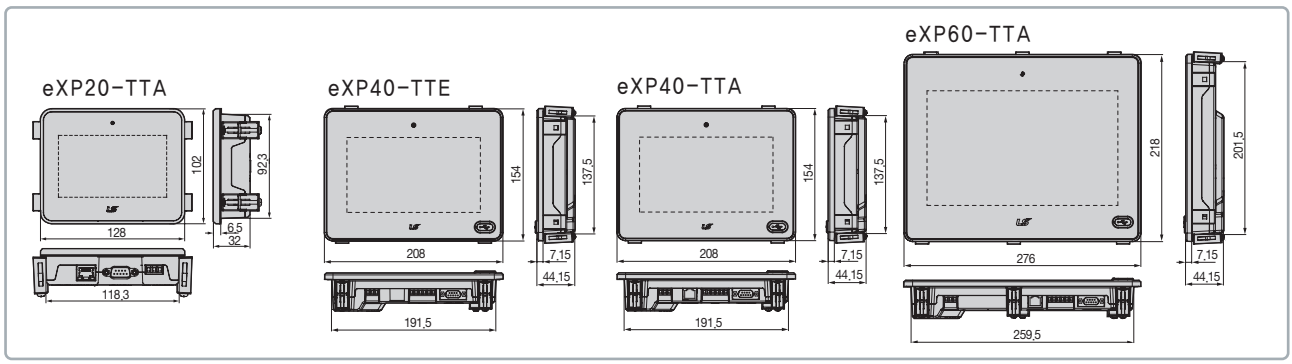

LS IS Co., Ltd.

HEAD OFFICE :
LS Tower, 127, LS-ro, Dongan-gu, Anyang-si, Gyeonggi-Do, 431-848, Korea
TEL: 82-2-2034-4623~38 FAX: 82-2-2034-4622

©2015 LSIS Co., Ltd. All Rights Reserved.

2016.06 Printed in Korea _ HumanPower