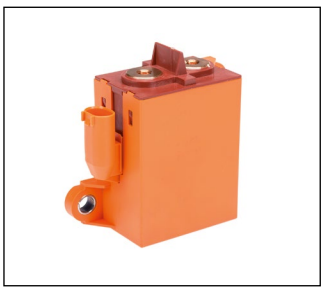

Key Features

- Continuous current up to 175 A
- Suitable for voltage levels up to 500 VDC [1)]
- Short circuit carry capability 5,000 A
- Mounting in any direction
- Available with dual and single coil

Typical Applications

- DC high voltage high current applications
- Main contactors for hybrid, full battery electric vehicles and fuel cell cars
- Battery charging systems

Contact Data

Contact arrangement:
1 Form X (NO DM)

Rated voltage:
450 VDC [1)]

Limiting cont. current at 85 °C:
175 A

Limiting making / breaking current:
210 A / 30 A (>100,000 ops.)

Short term current rating:
(0.5 min) 500 A

Short circuit carry current:
(20 ms) 5,000A

Operate / release time max. (typ.):
20 / 8 ms at 12 VDC (coil voltage)

Coil Data

Rated coil voltage / power: 12 VDC

Rated coil power (+23 °C):
0.8 W (single coil), 0.49 W (dual coil) [2)]

Coil resistance (+23 °C):
5 Ω (single coil), 3 / 33 Ω (dual coil)

Coil Data

Ambient temperature:
-40 °C to +85 °C

Category and degree of protection:
dustproof, IP 50 (upright); IP54 [3)] (others)

Terminal type and mounting:
Connector (coil) / M6 bolts (load); screws

Dimensions LxWxH (approx.):
77.3 x 50.9 x 34.2 mm (3.0 x 2.0 x 1.3")

Weight (approx.):
295 g (10.4 oz)

EVC 175 Main Contactor

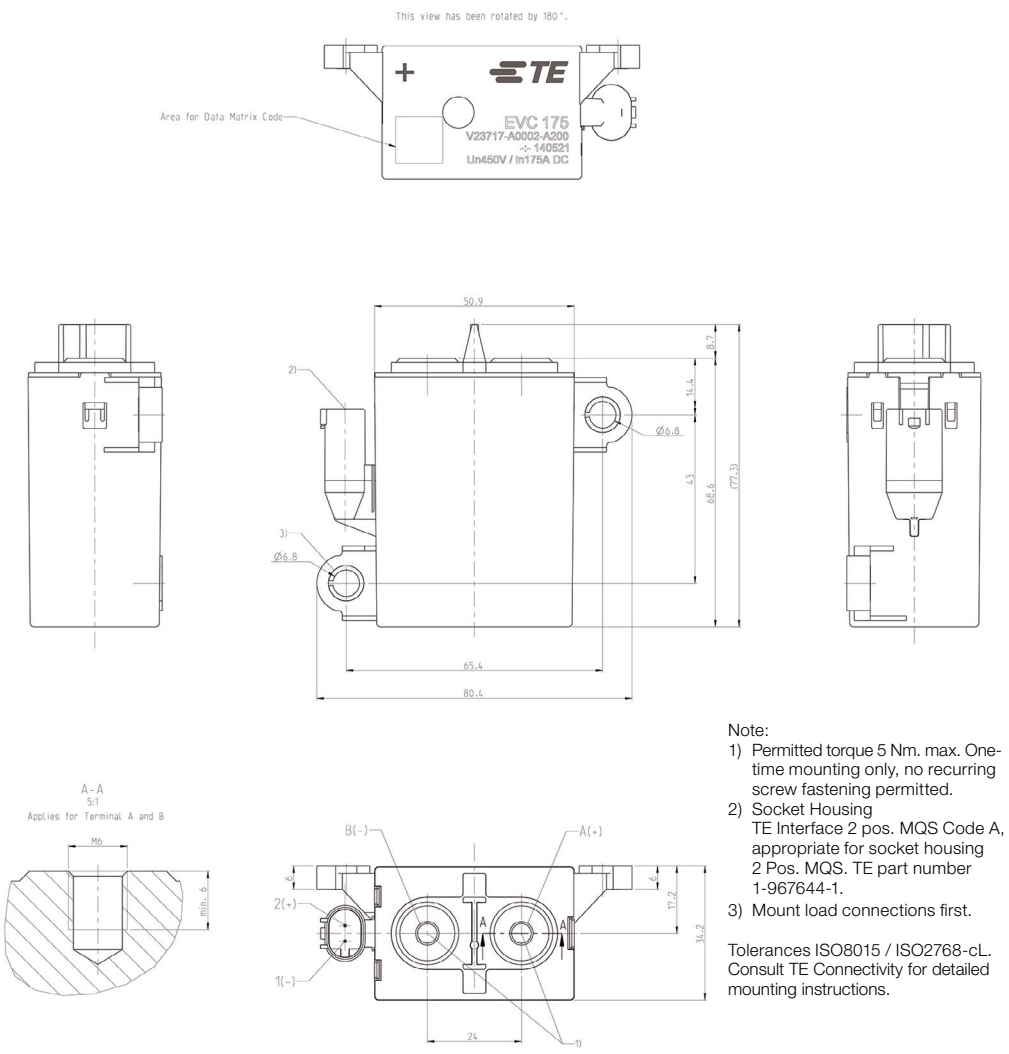

Note:
1) Permitted torque 5 Nm. max. One-time mounting only, no recurring screw fastening permitted.
2) Socket Housing
TE Interface 2 pos. MQS Code A, appropriate for socket housing 2 Pos. MQS. TE part number 1-967644-1.
3) Mount load connections first.

Tolerances ISO8015 / ISO2768-cL. Consult TE Connectivity for detailed mounting instructions.

Bottom Mount

Ordering Information EVC 175 Main Contactor

Product Code	Arrangement	Coil (VDC)	Econo-mization	Coil Suppr.	Rated Voltage (VDC)	Terminal Type	Mounting	Resistance	Part Number
V23717-A0001-A200	1 form X (NO DM)	12	External economizer	External > 36 V	450	Connector/ Screws	Side	5 Ω Single coil	6-1904123-6
V23717-A0002-A200	1 form X (NO DM)	12	Internal economizer	Internal	450	Connector/ Screws	Side	3 / 33 Ω Dual coil	2-1904070-1

1) Consult TE Connectivity for higher voltages. For details please refer to datasheet.
2) Valid for 23°C coil temperature with active economization.
3) Protection class applicable for all mounting orientations except load terminals on top.