STAINLESS STEEL ENCLOSED SAFETY SWITCHES / ISOLATORS 16-160A

- Designed for hygienic and heavy environments
- Easy to install and to keep clean
- IP66, stainless steel enclosure
- Acid proof, AISI 316
- Rainhood protection with angled top
- Padlockable stainless steel handle

H23T

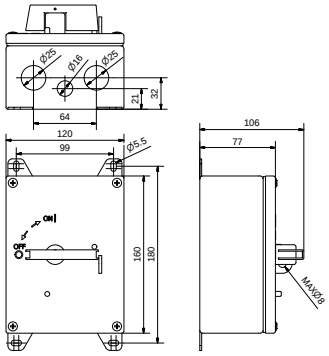

H24T

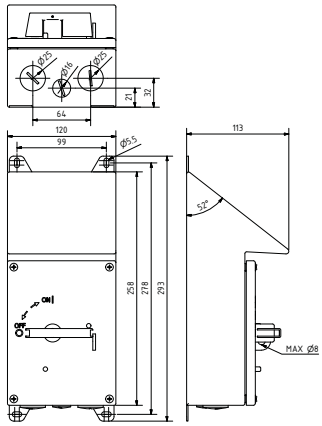

H32T

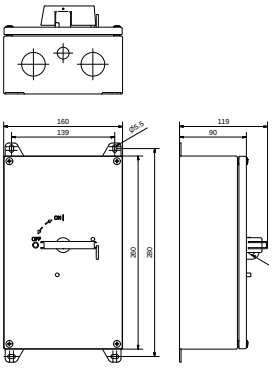

H34T

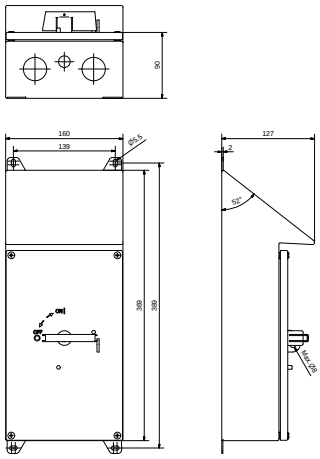

H02T

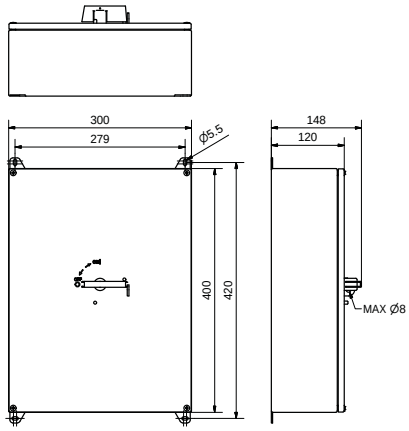

H02TR

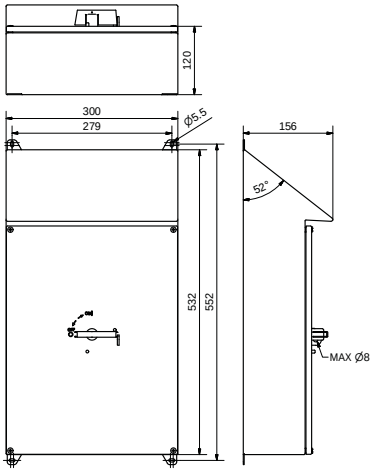

Type		AC-21	AC-22	AC-23		AC-23		EAN-Code 6419410...		Enclosure & handle		Weight kg	
		400 V 415 V 690 V	400 V 415 V 690 V		400 V 415 V		690 V						
Without angled top	With angled top	I_e / A	I_e / A	I_e / A	P / kW	I_e / A	P / kW	Without angled top	With angled top	Without angled top	With angled top	Without angled top	With angled top
3-pole													
KER 316R	KER 316RS	25 A	16 A	16 A	7.5 kW	16 A	11 kW	...306550	...306611	H23T	H24T	1.2	1.7
KER 325R	KER 325RS	40 A	25 A	25 A	11 kW	25 A	22 kW	...306567	...306628	H23T	H24T	1.2	1.7
KER 340R	KER 340RS	63 A	40 A	40 A	22 kW	32 A	30 kW	...306574	...306635	H23T	H24T	1.2	1.7
KER 363R	KER 363RS	80 A	63 A	40 A	22 kW	40 A	37 kW	...306703	...307052	H32T	H34T	2,3	2,9
KER 380R	KER 380RS	100 A	80 A	63 A	30 kW	40 A	37 kW	...306710	...307069	H32T	H34T	2,3	2,9
KER 3125R	KER 3125RS	160 A	125 A	100 A	55 kW	80 A	55 kW	...357828	...357835	H02T	H02TR	6,9	8
KER 3160R	KER 3160RS	200 A	160 A	135 A	75 kW	125 A	90 kW	...357842	...357859	H02T	H02TR	6,9	8
4-pole													
KER 416R	KER 416RS	25 A	16 A	16 A	7.5 kW	16 A	11 kW	...306581	...306642	H23T	H24T	1.3	1.8
KER 425R	KER 425RS	40 A	25 A	25 A	11 kW	25 A	22 kW	...306598	...306659	H23T	H24T	1.3	1.8
KER 440R	KER 440RS	63 A	40 A	40 A	22 kW	32 A	30 kW	...306604	...306666	H23T	H24T	1.3	1.8
KER 463R	KER 463RS	80 A	63 A	40 A	22 kW	40 A	37 kW	...306727	...307076	H32T	H34T	2,4	3,0
KER 480R	KER 480RS	100 A	80 A	63 A	30 kW	40 A	37 kW	...306734	...307083	H32T	H34T	2,4	3,0
KER 4125R	KER 4125RS	160 A	125 A	100 A	55 kW	80 A	55 kW	...305720	...305737	H02T	H02TR	7	8,1
KER 4160R	KER 4160RS	200 A	160 A	135 A	75 kW	125 A	90 kW	...305744	...305751	H02T	H02TR	7	8,1

Data subject to change without notice

Stainless steel safety switches at Arla Foods